AP 3-TNS 32 - Cover

5022669

https://www.phoenixcontact.com/us/products/5022669

Please be informed that the data shown in this PDF document is generated from our online catalog. Please find the complete data in the user documentation. Our general terms of use for downloads are valid.



Sealable cover profile, for mounting on NS 32 DIN rail and for fixing the cover profile AP 3, with plastic knurled nut M5, space requirement: 13 mm

Commercial data

Item number	5022669
Packing unit	10 pc
Minimum order quantity	10 pc
Sales key	BE06
Product key	BE61ZX
GTIN	4017918095260
Weight per piece (including packing)	18.92 g
Weight per piece (excluding packing)	18.13 g
Customs tariff number	85389099
Country of origin	DE

Technical data

Product properties

Product type	Cover profile carrier

Dimensions

Dimensional drawing	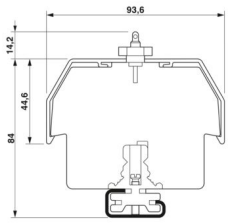
Width	13 mm
Height	84 mm
Depth	94.4 mm
Length	84 mm

Material specifications

Color	gray (RAL 7042)
Material	PA
Flammability rating according to UL 94	V2
Static insulating material application in cold	-40 °C
Relative insulation material temperature index (Elec., UL 746 B)	125 °C

Environmental and real-life conditions

Ambient conditions

Ambient temperature (operation)	-40 °C ... 110 °C (Operating temperature range incl. self-heating; for max. short-term operating temperature, see RTI Elec.)
Ambient temperature (storage/transport)	-25 °C ... 60 °C (for a short time, not exceeding 24 h, -60 °C to +70 °C)
Ambient temperature (assembly)	-5 °C ... 70 °C
Ambient temperature (actuation)	-5 °C ... 70 °C
Permissible humidity (operation)	20 % ... 90 %
Permissible humidity (storage/transport)	30 % ... 70 %

Drawings

Dimensional drawing

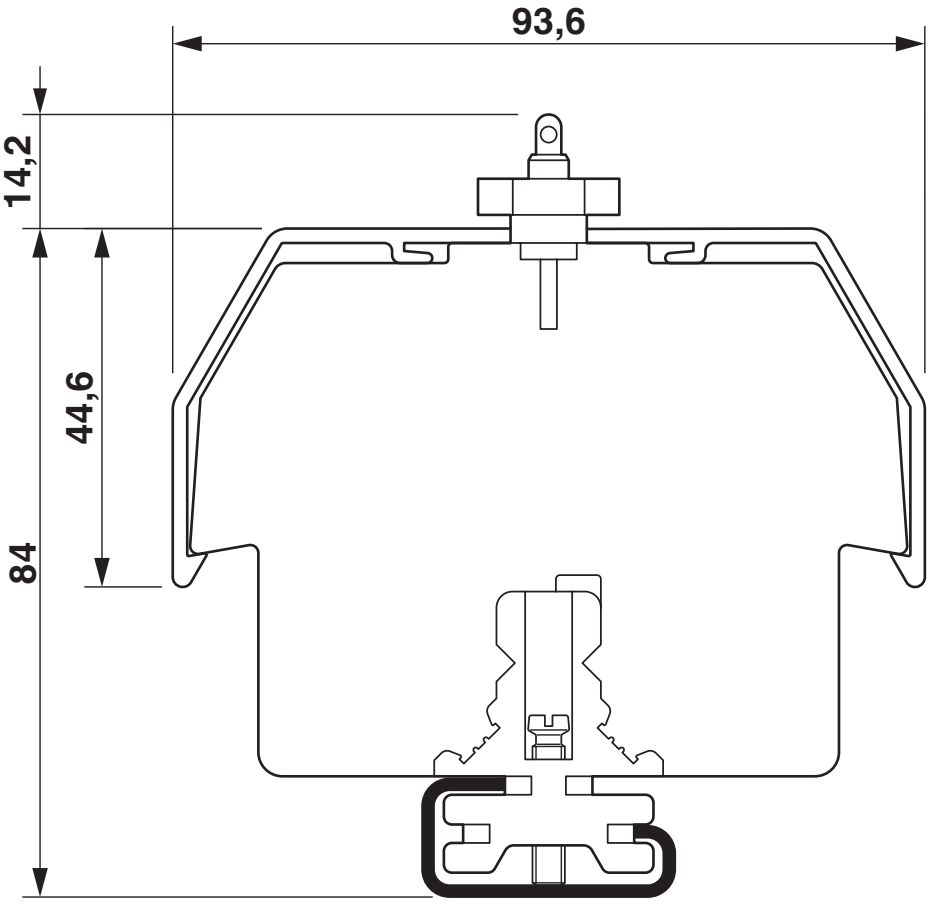

Classifications

ECLASS

ECLASS-13.0	27371392
ECLASS-15.0	27250302

ETIM

ETIM 10.0	EC001041

UNSPSC

UNSPSC 21.0	39121100

Environmental product compliance

EU RoHS

Fulfills EU RoHS substance requirements	Yes, No exemptions

China RoHS

Environment friendly use period (EFUP)	EFUP-E
	No hazardous substances above the limits

EU REACH SVHC

REACH candidate substance (CAS No.)	No substance above 0.1 wt%

Phoenix Contact 2026 © - all rights reserved
https://www.phoenixcontact.com

Phoenix Contact USA
586 Fulling Mill Road
Middletown, PA 17057, United States
(+717) 944-1300
info@phoenixcon.com