PTPOWER 95-FE - High-current terminal block

3260139

https://www.phoenixcontact.com/us/products/3260139

Please be informed that the data shown in this PDF document is generated from our online catalog. Please find the complete data in the user documentation. Our general terms of use for downloads are valid.





High-current terminal block, nom. voltage: 1000 V, nominal current: 232 A, number of connections: 2, number of positions: 1, connection method: PowerTurn connection, cross section: 25 mm^2 - 95 mm^2, mounting type: NS 35/15, color: black/yellow

Your advantages

- Quick and easy connection is now also possible for large conductors with the high-current terminal block
- In addition to using the existing test pick-off, pick-off terminal blocks can be connected, each of which can also accommodate two test cables
- The compact design enables wiring in a confined space
- The Push-in connection terminal blocks are characterized by the system features of the CLIPLINE complete system and by easy and tool-free wiring of conductors with ferrules or solid conductors
- Tested for railway applications

Commercial data

Item number	3260139
Packing unit	3 pc
Minimum order quantity	3 pc
Sales key	BE22
Product key	BE2211
GTIN	4046356779050
Weight per piece (including packing)	253.334 g
Weight per piece (excluding packing)	182 g
Customs tariff number	85369010
Country of origin	TR

Technical data

Product properties

Product type	High current terminal block
Area of application	Railway industry
	Machine building
	Plant engineering
Number of positions	1
Number of connections	2
Number of rows	1
Potentials	1

Insulation characteristics

Overvoltage category	III
Degree of pollution	3

Electrical properties

Rated surge voltage	8 kV
Maximum power dissipation for nominal condition	7.54 W

Connection data

Number of connections per level	2
Nominal cross section	95 mm²
Connection method	PowerTurn connection
Stripping length	40 mm
Connection in acc. with standard	IEC 60947-7-1
Conductor cross-section rigid	25 mm² ... 95 mm²
Cross section AWG	2 ... 3/0 (converted acc. to IEC)
Conductor cross-section flexible	25 mm² ... 95 mm²
Conductor cross-section, flexible [AWG]	2 ... 3/0 (converted acc. to IEC)
Conductor cross-section flexible (ferrule without plastic sleeve)	25 mm² ... 95 mm²
Flexible conductor cross-section (ferrule with plastic sleeve)	25 mm² ... 95 mm²
Cross-section with insertion bridge, rigid	70 mm²
Cross-section with insertion bridge, flexible	70 mm²
Nominal current	232 A
Maximum load current	232 A (with 95 mm² conductor cross-section)
Nominal voltage	1000 V

Connection cross sections directly pluggable

Conductor cross-section rigid	25 mm² ... 95 mm²
Conductor cross-section flexible (ferrule without plastic sleeve)	25 mm² ... 95 mm²
Flexible conductor cross-section (ferrule with plastic sleeve)	25 mm² ... 95 mm²

Ex data

Rated data (ATEX/IECEx)

Identification	Ⓔx II 2 GD Ex eb IIC Gb
Operating temperature range	-60 °C ... 110 °C
Ex-certified accessories	1206612 SZF 3-1,0X5,5
	1201662 E/AL-NS 35
List of bridges	Insertion bridge / EB 2-25/PT / 3260157
Bridge data	144 A (50 mm²)
	174 A (70 mm²)
List of bridges	Insertion bridge / EB 3-25/PT / 3260160
Bridge data	144 A (50 mm²)
	174 A (70 mm²)
Ex temperature increase	40 K (237 A / 95 mm²)
at bridging with insertion bridge	1100 V
for bridging with bridge	1100 V
Rated insulation voltage	1000 V
output	(Permanent)

Ex level General

Rated voltage	1100 V
Rated current	215 A
Maximum load current	215 A
Contact resistance	0.1 mΩ

Ex connection data General

Ferrule length	40 mm
Stripping length	40 mm
Nominal cross section	95 mm²
Rated cross section AWG	4/0
Connection capacity rigid	25 mm² ... 95 mm²
Connection capacity AWG	4 ... 4/0
Conductor cross-section flexible, with ferrule without plastic sleeve min.	25 mm²
Conductor cross-section flexible, with ferrule without plastic sleeve max.	95 mm²
Single conductor/terminal point, flexible, with ferrule, without plastic sleeve, AWG	4 ... 4/0

Dimensions

Width	25 mm
Height	105.5 mm
Depth	99.8 mm
Depth on NS 35/15	108.7 mm

Material specifications

	multicolored (RAL -)

Color	black (RAL 9005)
	yellow (RAL 1018)
Flammability rating according to UL 94	V0
Insulating material group	I
Insulating material	PA
Static insulating material application in cold	-60 °C
Relative insulation material temperature index (Elec., UL 746 B)	130 °C
Fire protection for rail vehicles (DIN EN 45545-2) R22	HL 1 - HL 3
Fire protection for rail vehicles (DIN EN 45545-2) R23	HL 1 - HL 3
Fire protection for rail vehicles (DIN EN 45545-2) R24	HL 1 - HL 3
Fire protection for rail vehicles (DIN EN 45545-2) R26	HL 1 - HL 3
Surface flammability NFPA 130 (ASTM E 162)	passed
Specific optical density of smoke NFPA 130 (ASTM E 662)	passed
Smoke gas toxicity NFPA 130 (SMP 800C)	passed

Electrical tests

Surge voltage test

Test voltage setpoint	9.8 kV
Result	Test passed

Temperature-rise test

Requirement temperature-rise test	Increase in temperature ≤ 45 K
Result	Test passed
Short-time withstand current 95 mm²	11.4 kA
Result	Test passed

Power-frequency withstand voltage

Test voltage setpoint	6 kV
Result	Test passed

Mechanical properties

Mechanical data

Open side panel	No

Mechanical tests

Mechanical strength

Result	Test passed

Attachment on the carrier

DIN rail/fixing support	NS 35/15
Test force setpoint	15 N
Result	Test passed

Test for conductor damage and slackening

Rotation speed	10 rpm

Revolutions	135
Conductor cross-section/weight	25 mm² / 4.5 kg
	95 mm²/14 kg
Result	Test passed

Environmental and real-life conditions

Aging

Temperature cycles	192
Result	Test passed

Needle-flame test

Time of exposure	30 s
Result	Test passed

Oscillation/broadband noise

Specification	DIN EN 50155 (VDE 0115-200):2008-03
Spectrum	Long life test category 2, bogie-mounted
Frequency	f_1 = 5 Hz to f_2 = 250 Hz
ASD level	6.12 (m/s²)²/Hz
Acceleration	3.12g
Test duration per axis	5 h
Test directions	X-, Y- and Z-axis
Result	Test passed

Shocks

Specification	DIN EN 50155 (VDE 0115-200):2008-03
Pulse shape	Half-sine
Acceleration	30g
Shock duration	18 ms
Number of shocks per direction	3
Test directions	X-, Y- and Z-axis (pos. and neg.)
Result	Test passed

Ambient conditions

Ambient temperature (operation)	-60 °C ... 110 °C (Operating temperature range incl. self-heating; for max. short-term operating temperature, see RTI Elec.)
Ambient temperature (storage/transport)	-25 °C ... 60 °C (for a short time, not exceeding 24 h, -60 °C to +70 °C)
Ambient temperature (assembly)	-5 °C ... 70 °C
Ambient temperature (actuation)	-5 °C ... 70 °C
Permissible humidity (operation)	20 % ... 90 %
Permissible humidity (storage/transport)	30 % ... 70 %

Standards and regulations

Connection in acc. with standard	IEC 60947-7-1

Mounting

Mounting type	NS 35/15

Drawings

Schematic diagram

PTPOWER



AGK 10-PTPOWER	**0,5 mm² ... 16 mm²**	**18 mm**
PTPOWER 35	**2,5 mm² ... 35 mm²**	**25 mm**
PTPOWER 50	**10 mm² ... 50 mm²**	**32 mm**
PTPOWER 95	**25 mm² ... 95 mm²**	**40 mm**
PTPOWER 185	**95 mm² ... 185 mm²**	**40 mm**

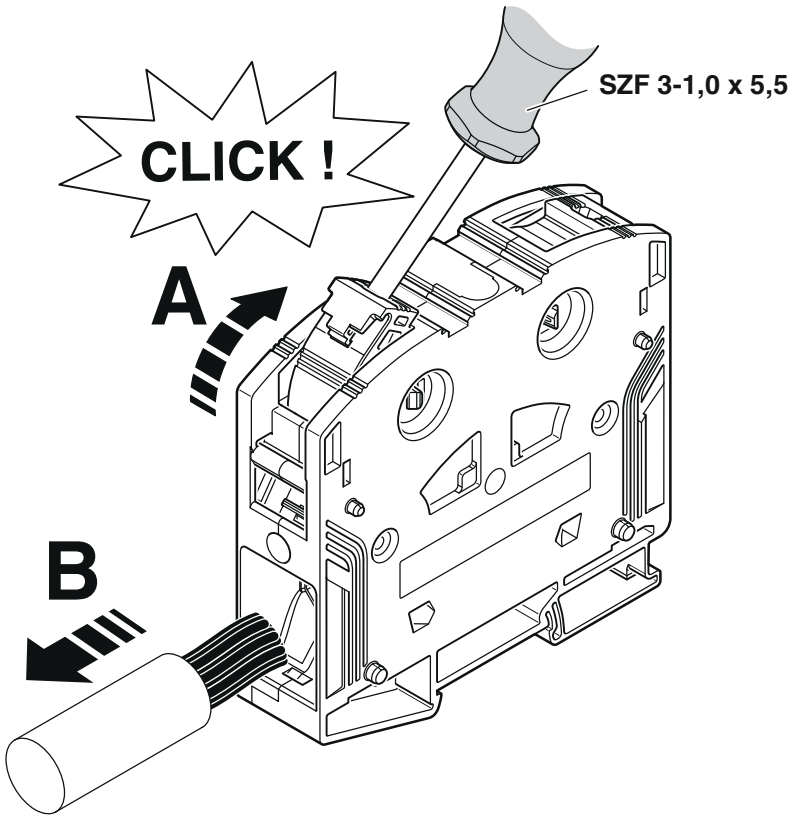

Circuit diagram



Approvals

To download certificates, visit the product detail page: https://www.phoenixcontact.com/us/products/3260139

CSA
Approval ID: 13631

	Nominal voltage U_N	Nominal current I_N	Cross section AWG	Cross section mm^2
B				
	600 V	230 A	4 - 4/0	-
C				
	1000 V	230 A	4 - 4/0	-

EAC
Approval ID: RU C-DE.BL08.B.00644

DNV
Approval ID: TAE00000Z9

cUL Recognized
Approval ID: E60425

	Nominal voltage U_N	Nominal current I_N	Cross section AWG	Cross section mm^2
C				
	1000 V	230 A	4 - 4/0	-

UL Recognized
Approval ID: E60425

	Nominal voltage U_N	Nominal current I_N	Cross section AWG	Cross section mm^2
E				
	1000 V	230 A	4 - 4/0	-

CCC
Approval ID: 2020322313000630

UKCA-EX
Approval ID: CML 22UKEX1227U

IECEx
Approval ID: IECExSEV14.0013U

ATEX
Approval ID: SEV14ATEX0156U

	Nominal voltage U_N	Nominal current I_N	Cross section AWG	Cross section mm^2
keine				
	1100 V	215 A	-	25 - 95

IECEx
Approval ID: IECExSEV14.0013U

EAC Ex
Approval ID: KZ 7500525010101950

Classifications

ECLASS

ECLASS-13.0	27250101
ECLASS-15.0	27250101

ETIM

ETIM 10.0	EC000897

UNSPSC

UNSPSC 21.0	39121400

Environmental product compliance

EU RoHS

Fulfills EU RoHS substance requirements	Yes, No exemptions

China RoHS

Environment friendly use period (EFUP)	EFUP-E
	No hazardous substances above the limits

EU REACH SVHC

REACH candidate substance (CAS No.)	No substance above 0.1 wt%

EF3.1 Climate Change

CO2e kg	3.189 kg CO2e

Phoenix Contact 2026 © - all rights reserved
https://www.phoenixcontact.com

Phoenix Contact USA
586 Fulling Mill Road
Middletown, PA 17057, United States
(+717) 944-1300
info@phoenixcon.com