UKH 95-FE - High-current terminal block

3247054

https://www.phoenixcontact.com/us/products/3247054

Please be informed that the data shown in this PDF document is generated from our online catalog. Please find the complete data in the user documentation. Our general terms of use for downloads are valid.





High-current terminal block, nom. voltage: 1000 V, nominal current: 232 A, number of connections: 2, connection method: Screw connection, Rated cross section: 95 mm^2, cross section: 25 mm^2 - 95 mm^2, mounting type: NS 35/15, NS 32, color: black/yellow

Your advantages

- Reliable cable connection is ensured by three-point centering of the conductor in the prismatic sleeve base
- Screw locking by means of spring-loaded elements in the clamping part
- Low contact resistance of the contact surface due to ribbing

Commercial data

Item number	3247054
Packing unit	3 pc
Minimum order quantity	3 pc
Sales key	BE13
Product key	BE1311
GTIN	4046356707206
Weight per piece (including packing)	231.333 g
Weight per piece (excluding packing)	203 g
Customs tariff number	85369010
Country of origin	IN

Technical data

Notes

General

Note	For a reliable contact of multi stranded conductors it is recommended to untwist multi stranded conductors.

Product properties

Product type	High current terminal block
Number of connections	2
Number of rows	1
Potentials	1

Insulation characteristics

Overvoltage category	III
Degree of pollution	3

Electrical properties

Rated surge voltage	8 kV
Maximum power dissipation for nominal condition	7.54 W

Connection data

Number of connections per level	2
Nominal cross section	95 mm²

Level 1 above 1 below 1

Connection method	Screw connection
Screw thread	M8
Note	Screws with hexagonal socket
Tightening torque	15 ... 20 Nm
Stripping length	33 mm
Connection in acc. with standard	IEC 60947-7-1
Conductor cross-section rigid	25 mm² ... 95 mm²
Cross section AWG	2 ... 3/0 (converted acc. to IEC)
Conductor cross-section flexible	35 mm² ... 95 mm²
Conductor cross-section, flexible [AWG]	1/0 ... 3/0 (converted acc. to IEC)
Conductor cross-section flexible (ferrule without plastic sleeve)	35 mm² ... 95 mm²
Flexible conductor cross-section (ferrule with plastic sleeve)	35 mm² ... 95 mm²
Cross-section with insertion bridge, rigid	95 mm²
Cross-section with insertion bridge, flexible	70 mm²
2 conductors with same cross section, rigid	25 mm² ... 35 mm²
2 conductors with same cross section, flexible	25 mm² ... 35 mm²
2 conductors with same cross section, flexible, with ferrule without plastic sleeve	16 mm² ... 35 mm²

Nominal cross section	95 mm²
Nominal current	232 A
Maximum load current	232 A
Nominal voltage	1000 V
Note	Note: Product releases, connection cross sections and notes on connecting aluminum cables can be found in the download area.

Ex data

Rated data (ATEX/IECEx)

Identification	Ⓔx II 2 GD Ex eb IIC Gb
Operating temperature range	-60 °C ... 110 °C
Ex-certified accessories	1201934 VDE-ISS 6
	1201659 E/AL-NS 32
	1201662 E/AL-NS 35
List of bridges	Insertion bridge / EB 2-25/UKH / 0201362
	Insertion bridge / EB 3-25/UKH / 0201375
Bridge data	177 A (95 mm²)
Ex temperature increase	40 K (238.1 A / 95 mm²)
at bridging with insertion bridge	690 V
Rated insulation voltage	800 V
output	(Permanent)

Ex level General

Rated voltage	880 V
Rated current	216 A
Maximum load current	216 A
Contact resistance	0.06 mΩ

Ex connection data General

Torque range	15 Nm ... 20 Nm
Nominal cross section	95 mm²
Rated cross section AWG	3/0
Connection capacity rigid	25 mm² ... 95 mm²
Connection capacity AWG	4 ... 3/0
Connection capacity flexible	35 mm² ... 95 mm²
Connection capacity AWG	2 ... 3/0
2 conductors with same cross section, solid	25 mm² ... 35 mm²
2 conductors with the same cross-section AWG rigid	4 ... 2
2 conductors with same cross section, stranded	25 mm² ... 35 mm²
2 conductors with the same cross-section AWG flexible	4 ... 2

Dimensions

Dimensional drawing	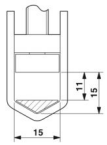
Width	25 mm
Height	83 mm
Depth on NS 32	95 mm
Depth on NS 35/15	97.5 mm

Material specifications

Color	multicolored (RAL -)
	black (RAL 9005)
	yellow (RAL 1018)
Flammability rating according to UL 94	V0
Insulating material group	I
Insulating material	PA

Electrical tests

Surge voltage test

Result	Test passed

Temperature-rise test

Requirement temperature-rise test	Increase in temperature ≤ 45 K
Result	Test passed
Short-time withstand current 95 mm²	11.4 kA
Result	Test passed

Power-frequency withstand voltage

Test voltage setpoint	2.2 kV
Result	Test passed

Mechanical properties

General

Terminal block mounting	15 Nm ... 20 Nm (PE foot with mounting screw, M8)

Mechanical data

Open side panel	No

Mechanical tests

Mechanical strength

Result	Test passed

Attachment on the carrier

DIN rail/fixing support	NS 32/NS 35

Result	Test passed

Test for conductor damage and slackening

Rotation speed	10 (+/- 2) rpm
Revolutions	135
Conductor cross-section/weight	25 mm² / 4.5 kg
	35 mm² / 6.8 kg
	95 mm²/14 kg
Result	Test passed

Environmental and real-life conditions

Needle-flame test

Time of exposure	30 s
Result	Test passed

Oscillation/broadband noise

Specification	DIN EN 50155 (VDE 0115-200):2022-06
Spectrum	Long life test category 2, bogie-mounted
Frequency	f_1 = 5 Hz to f_2 = 250 Hz
ASD level	6.12 (m/s²)²/Hz
Acceleration	3.12g
Test duration per axis	5 h
Test directions	X-, Y- and Z-axis
Result	Test passed

Shocks

Specification	DIN EN 50155 (VDE 0115-200):2022-06
Pulse shape	Half-sine
Acceleration	5g
Shock duration	30 ms
Number of shocks per direction	3
Test directions	X-, Y- and Z-axis (pos. and neg.)
Result	Test passed

Ambient conditions

Ambient temperature (operation)	-60 °C ... 110 °C (Operating temperature range incl. self-heating; for max. short-term operating temperature, see RTI Elec.)
Ambient temperature (storage/transport)	-25 °C ... 60 °C (for a short time, not exceeding 24 h, -60 °C to +70 °C)
Ambient temperature (assembly)	-5 °C ... 70 °C
Ambient temperature (actuation)	-5 °C ... 70 °C
Permissible humidity (operation)	20 % ... 90 %
Permissible humidity (storage/transport)	30 % ... 70 %

Standards and regulations

Connection in acc. with standard	IEC 60947-7-1

Mounting

Mounting type	NS 35/15
	NS 32
Terminal block mounting	15 Nm ... 20 Nm (PE foot with mounting screw, M8)

Drawings

Dimensional drawing

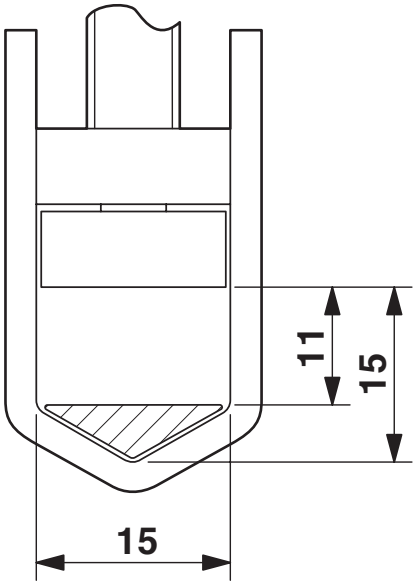

Schematic diagram

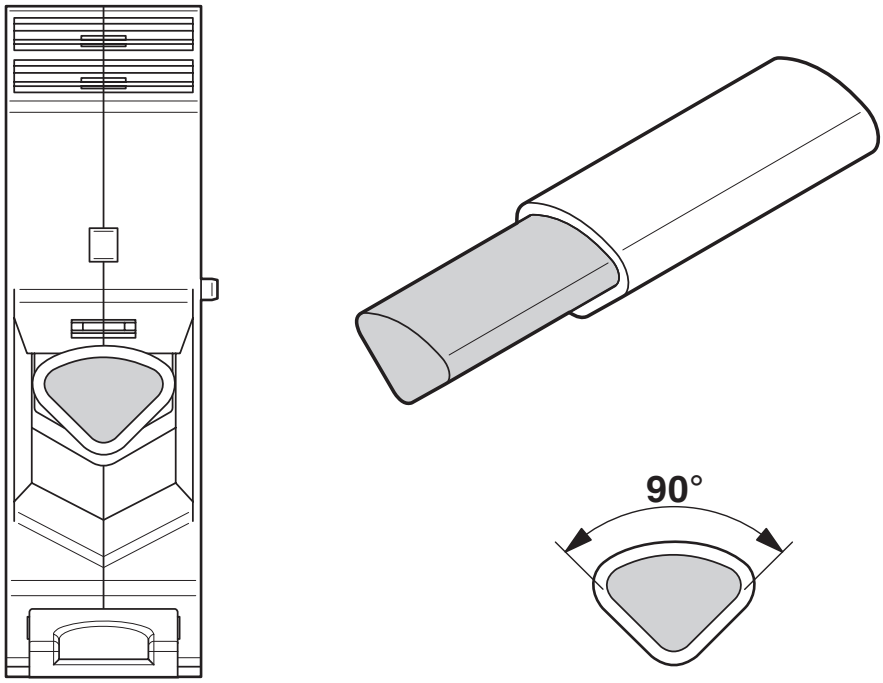

Connecting aluminum cables. Further notes can be found in the download area

Circuit diagram



Approvals

To download certificates, visit the product detail page: https://www.phoenixcontact.com/us/products/3247054

CSA
Approval ID: 13631

	Nominal voltage U_N	Nominal current I_N	Cross section AWG	Cross section mm^2
B				
	600 V	200 A	2 - 4/0	-
C				
	600 V	200 A	2 - 4/0	-

cULus Recognized
Approval ID: E60425

	Nominal voltage U_N	Nominal current I_N	Cross section AWG	Cross section mm^2
B				
	600 V	230 A	2 - 4/0	-
Multi-conductor connection	600 V	230 A	4 - 2	-
C				
	600 V	230 A	2 - 4/0	-
Multi-conductor connection	600 V	230 A	4 - 2	-

DNV
Approval ID: TAE00001CT

ATEX
Approval ID: KEMA98ATEX1786U

EAC Ex
Approval ID: KZ 7500525010101950

IECEx
Approval ID: IECExKEM06.0029U

CCC
Approval ID: 2020322313000623

UKCA-EX

Approval ID: DEKRA 21UKEX0307U

UL Comp Hazloc CA US
Approval ID: UL US CA L 192998

	Nominal voltage U_N	Nominal current I_N	Cross section AWG	Cross section mm^2
keine				
	600 V	230 A	2 - 4/0	-

Classifications

ECLASS

ECLASS-13.0	27250101
ECLASS-15.0	27250101

ETIM

ETIM 10.0	EC000897

UNSPSC

UNSPSC 21.0	39121400

Environmental product compliance

EU RoHS

Fulfills EU RoHS substance requirements	Yes, No exemptions

China RoHS

Environment friendly use period (EFUP)	EFUP-E
	No hazardous substances above the limits

EU REACH SVHC

REACH candidate substance (CAS No.)	No substance above 0.1 wt%

Phoenix Contact 2026 © - all rights reserved
https://www.phoenixcontact.com

Phoenix Contact USA
586 Fulling Mill Road
Middletown, PA 17057, United States
(+717) 944-1300
info@phoenixcon.com