SKS 8 - Shield connection terminal block

3240210

https://www.phoenixcontact.com/us/products/3240210

Please be informed that the data shown in this PDF document is generated from our online catalog. Please find the complete data in the user documentation. Our general terms of use for downloads are valid.



Shield connection terminal block, for applying the shield to busbars

Your advantages

- As components, it is not possible to certify shield connections in accordance with the requirements of the directive and standards for electrical equipment in potentially explosive areas. As such, shield connection clamps can be used in the Ex area even without an appropriate approval or marking.
- Three different mounting types supported: on NS 35 DIN rails, on busbars, or directly on conductive mounting panels

Commercial data

Item number	3240210
Packing unit	10 pc
Minimum order quantity	10 pc
Sales key	BE75
Product key	BE7522
GTIN	4046356458658
Weight per piece (including packing)	9.3 g
Weight per piece (excluding packing)	8.58 g
Customs tariff number	85369010
Country of origin	CZ

Technical data

Product properties

Product type	Shield connection clamp
Pitch	12.4 mm
Number of connections	1
Number of rows	1

Electrical properties

Maximum power dissipation for nominal condition	1.31 W

Connection data

Grounding foot	Yes
Connection method	Spring connection
Cross section AWG	12 ... 8 (converted acc. to IEC)
Conductor cross-section, flexible [AWG]	12 ... 8 (converted acc. to IEC)

Dimensions

Dimensional drawing	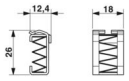
Width	12.4 mm
Height	18 mm
Depth	26 mm
Pitch	12.4 mm

External dimensions

Outside diameter	3 mm ... 8 mm

Material specifications

Color	silver-colored
Material	Steel

Cable/line

External cable diameter	3 mm ... 8 mm

Mechanical properties

Mechanical data

Open side panel	No

Mounting

Mounting type	Neutral busbar

Drawings

Dimensional drawing

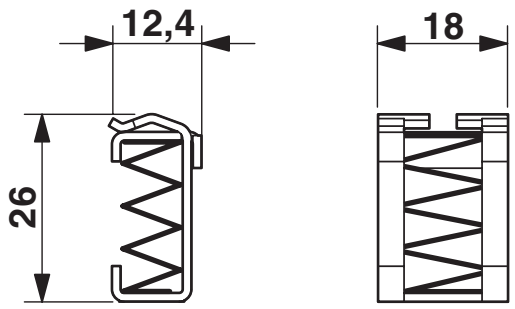

Classifications

ECLASS

ECLASS-13.0	27250309
ECLASS-15.0	27250309

ETIM

ETIM 10.0	EC002020

UNSPSC

UNSPSC 21.0	39121400

Environmental product compliance

EU RoHS

Fulfills EU RoHS substance requirements	Yes, No exemptions

China RoHS

Environment friendly use period (EFUP)	EFUP-E
	No hazardous substances above the limits

EU REACH SVHC

REACH candidate substance (CAS No.)	No substance above 0.1 wt%

EF3.1 Climate Change

CO2e kg	0.128 kg CO2e

Phoenix Contact 2026 © - all rights reserved
https://www.phoenixcontact.com

Phoenix Contact USA
586 Fulling Mill Road
Middletown, PA 17057, United States
(+717) 944-1300
info@phoenixcon.com