C-RCI 2,5/M3,5 - Ring cable lug

3240022

https://www.phoenixcontact.com/us/products/3240022

Please be informed that the data shown in this PDF document is generated from our online catalog. Please find the complete data in the user documentation. Our general terms of use for downloads are valid.



Ring cable lug, blue, 1.5 ... 2.5 mm^2, M3.5

Your advantages

- The sleeves are conically tapered to facilitate easy and correct insertion of the conductor
- The insulated ring cable lugs with plastic sleeve are hard-soldered and feature the 'EASY ENTRY' system

Commercial data

Item number	3240022
Packing unit	100 pc
Minimum order quantity	100 pc
Sales key	BH34
Product key	BH3421
GTIN	4046356451994
Weight per piece (including packing)	0.796 g
Weight per piece (excluding packing)	0.796 g
Customs tariff number	85369010
Country of origin	CN

Technical data

Product properties

Product type	Connector
Product property	Halogen-free
	With “Easy Entry” system
	Brazed
	PA-insulated

Dimensions

Dimensional drawing	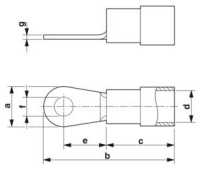
Width	6.6 mm
Sleeve length	20.6 mm
Length of the insulating material sleeve	11 mm
Maximum stripping length	8 mm
Distance from the center to the insulating material sleeve	6.3 mm
Min. material thickness	0.8 mm
Inner dimensions of the insulating collar	4.5 mm

Internal dimensions

Internal diameter	3.7 mm

Material specifications

Color	blue (RAL 5015)
Material	Copper
Flammability rating according to UL 94	V2
Coating	tin-plated
Insulating material	PA
Components	halogen-free

Mechanical properties

Technical data

Sleeve length	20.6 mm

Environmental and real-life conditions

Ambient conditions

Optimum ambient temperature (storage/transport)	20.00 °C 50.00 % Humidity (RH), store inside sealed original packaging. Avoid direct sunlight and heat.
Ambient temperature (operation)	-20 °C ... 105 °C

Ambient temperature (assembly)	-20 °C ... 100 °C
Short-term temperature	100 °C

Drawings

Dimensional drawing

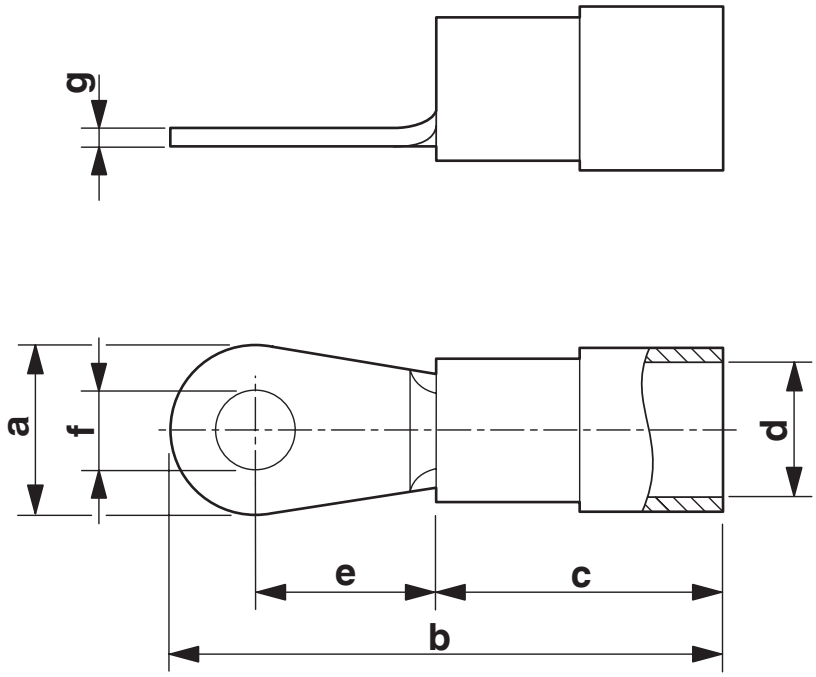

Classifications

ECLASS

ECLASS-13.0	27400204
ECLASS-15.0	27400204

ETIM

ETIM 10.0	EC001052

UNSPSC

UNSPSC 21.0	27121700

Environmental product compliance

EU RoHS

Fulfills EU RoHS substance requirements	Yes, No exemptions

China RoHS

Environment friendly use period (EFUP)	EFUP-E
	No hazardous substances above the limits

EU REACH SVHC

REACH candidate substance (CAS No.)	No substance above 0.1 wt%

EF3.1 Climate Change

CO2e kg	0.013 kg CO2e

Phoenix Contact 2026 © - all rights reserved
https://www.phoenixcontact.com

Phoenix Contact USA
586 Fulling Mill Road
Middletown, PA 17057, United States
(+717) 944-1300
info@phoenixcon.com