PTMED 6-CT/1P - Feed-through terminal block

3212301

https://www.phoenixcontact.com/us/products/3212301

Please be informed that the data shown in this PDF document is generated from our online catalog. Please find the complete data in the user documentation. Our general terms of use for downloads are valid.



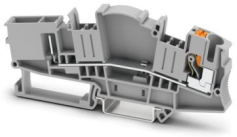

Feed-through terminal block, nom. voltage: 500 V, nominal current: 30 A, connection method: Push-in / plug connection, 1 level, Rated cross section: 6 mm^2, cross section: 0.5 mm^2 - 10 mm^2, color: gray

Product description

Test disconnect terminal block with plug-in zone for current transformer short circuit plug PPCT 6/...

Your advantages

- Time-saving conductor connection thanks to tool-free direct-connection technology
- Convenient plugging with lower insertion force
- High conductor pull-out forces due to the spring design
- Vibration-resistant and maintenance-free conductor connection
- Full flexibility thanks to the standardized CLIPLINE complete bridging, marking, and testing accessories
- Optimized for manual and automated wiring

Commercial data

Item number	3212301
Packing unit	50 pc
Minimum order quantity	50 pc
Sales key	BE22
Product key	BE2233
GTIN	4046356623186
Weight per piece (including packing)	19.86 g
Weight per piece (excluding packing)	19 g
Customs tariff number	85369010
Country of origin	PL

Technical data

Product properties

Product type	Test disconnect terminal block
Product family	PTME
Number of connections	2
Number of rows	1
Potentials	1

Insulation characteristics

Overvoltage category	III
Degree of pollution	3

Electrical properties

Rated surge voltage	6 kV
Maximum power dissipation for nominal condition	1.31 W

Connection data

Number of connections per level	2
Nominal cross section	6 mm²

1 level

Connection method	Push-in / plug connection
Stripping length	12 mm
Internal cylindrical gage	A5
Connection in acc. with standard	IEC 61984
Conductor cross-section rigid	0.5 mm² ... 10 mm²
Cross section AWG	20 ... 8 (converted acc. to IEC)
Conductor cross-section flexible	0.5 mm² ... 6 mm²
Conductor cross-section, flexible [AWG]	20 ... 10 (converted acc. to IEC)
Conductor cross-section flexible (ferrule without plastic sleeve)	0.5 mm² ... 6 mm²
Flexible conductor cross-section (ferrule with plastic sleeve)	0.5 mm² ... 6 mm²
Conductor cross-section flexible (2 conductors with the same cross-section, with TWIN ferrule and plastic sleeve)	0.5 mm² ... 1.5 mm²
2 conductors with the same cross section, flexible, with TWIN ferrule with plastic sleeve	0.5 mm² ... 1.5 mm²
Nominal cross section	6 mm²
Nominal current	30 A
Maximum load current	30 A (with 10 mm² conductor cross-section)
Nominal voltage	500 V

1 level Connection cross sections directly pluggable

Conductor cross-section rigid	1 mm² ... 10 mm²
Conductor cross-section flexible (ferrule without plastic sleeve)	1 mm² ... 6 mm²
Flexible conductor cross-section (ferrule with plastic sleeve)	1 mm² ... 6 mm²

Dimensions

Width	8.2 mm
End cover width	2.2 mm
Height	114.9 mm
Depth on NS 35/7,5	49.6 mm
Depth on NS 35/15	57.1 mm

Material specifications

Color	gray (RAL 7042)
Flammability rating according to UL 94	V0
Insulating material group	I
Insulating material	PA
Static insulating material application in cold	-60 °C
Temperature index of insulation material (DIN EN 60216-1 (VDE 0304-21))	130 °C
Relative insulation material temperature index (Elec., UL 746 B)	130 °C
Fire protection for rail vehicles (DIN EN 45545-2) R22	HL 1 - HL 3
Fire protection for rail vehicles (DIN EN 45545-2) R23	HL 1 - HL 3
Fire protection for rail vehicles (DIN EN 45545-2) R24	HL 1 - HL 3
Fire protection for rail vehicles (DIN EN 45545-2) R26	HL 1 - HL 3
Calorimetric heat release NFPA 130 (ASTM E 1354)	28 MJ/kg
Surface flammability NFPA 130 (ASTM E 162)	passed
Specific optical density of smoke NFPA 130 (ASTM E 662)	passed
Smoke gas toxicity NFPA 130 (SMP 800C)	passed

Electrical tests

Surge voltage test

Test voltage setpoint	4.8 kV
Result	Test passed
Short-time withstand current 4 mm²	0.5 kA
	0.15 kA
	1.25 kA
Result	Test passed

Power-frequency withstand voltage

Test voltage setpoint	2.21 kV
Result	Test passed

Mechanical properties

Mechanical data

Open side panel	Yes

Mechanical tests

Attachment on the carrier

DIN rail/fixing support	NS 35
Test force setpoint	5 N
Result	Test passed

Environmental and real-life conditions

Service life

Insertion/withdrawal cycles	100

Needle-flame test

Time of exposure	30 s
Result	Test passed

Oscillation/broadband noise

Specification	DIN EN 50155 (VDE 0115-200):2008-03
Spectrum	Long life test category 1, class B, body mounted
Frequency	f_1 = 5 Hz to f_2 = 150 Hz
ASD level	1.857 $(m/s^2)^2/Hz$
Acceleration	0.8g
Test duration per axis	5 h
Test directions	X-, Y- and Z-axis
Result	Test passed

Shocks

Specification	DIN EN 50155 (VDE 0115-200):2008-03
Pulse shape	Half-sine
Acceleration	5g
Shock duration	30 ms
Number of shocks per direction	3
Test directions	X-, Y- and Z-axis (pos. and neg.)
Result	Test passed

Ambient conditions

Ambient temperature (operation)	-60 °C ... 110 °C (Operating temperature range incl. self-heating; for max. short-term operating temperature, see RTI Elec.)
Ambient temperature (storage/transport)	-25 °C ... 60 °C (for a short time, not exceeding 24 h, -60 °C to +70 °C)
Ambient temperature (assembly)	-5 °C ... 70 °C
Ambient temperature (actuation)	-5 °C ... 70 °C
Permissible humidity (operation)	20 % ... 90 %
Permissible humidity (storage/transport)	30 % ... 70 %

Standards and regulations

Connection in acc. with standard	IEC 61984

Mounting

Mounting type	NS 35/7,5
	NS 35/15

Drawings

Connection diagram

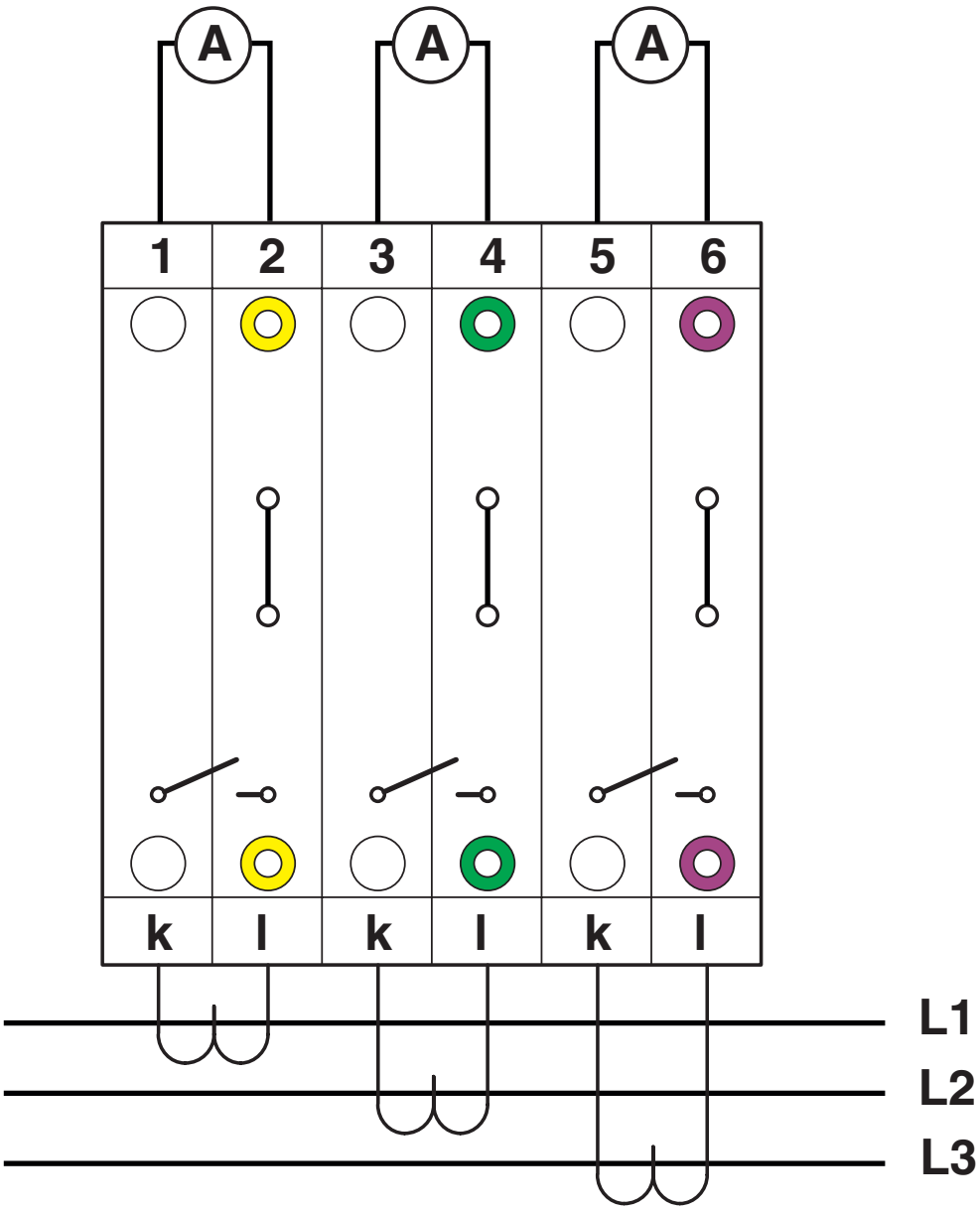

Connection diagram

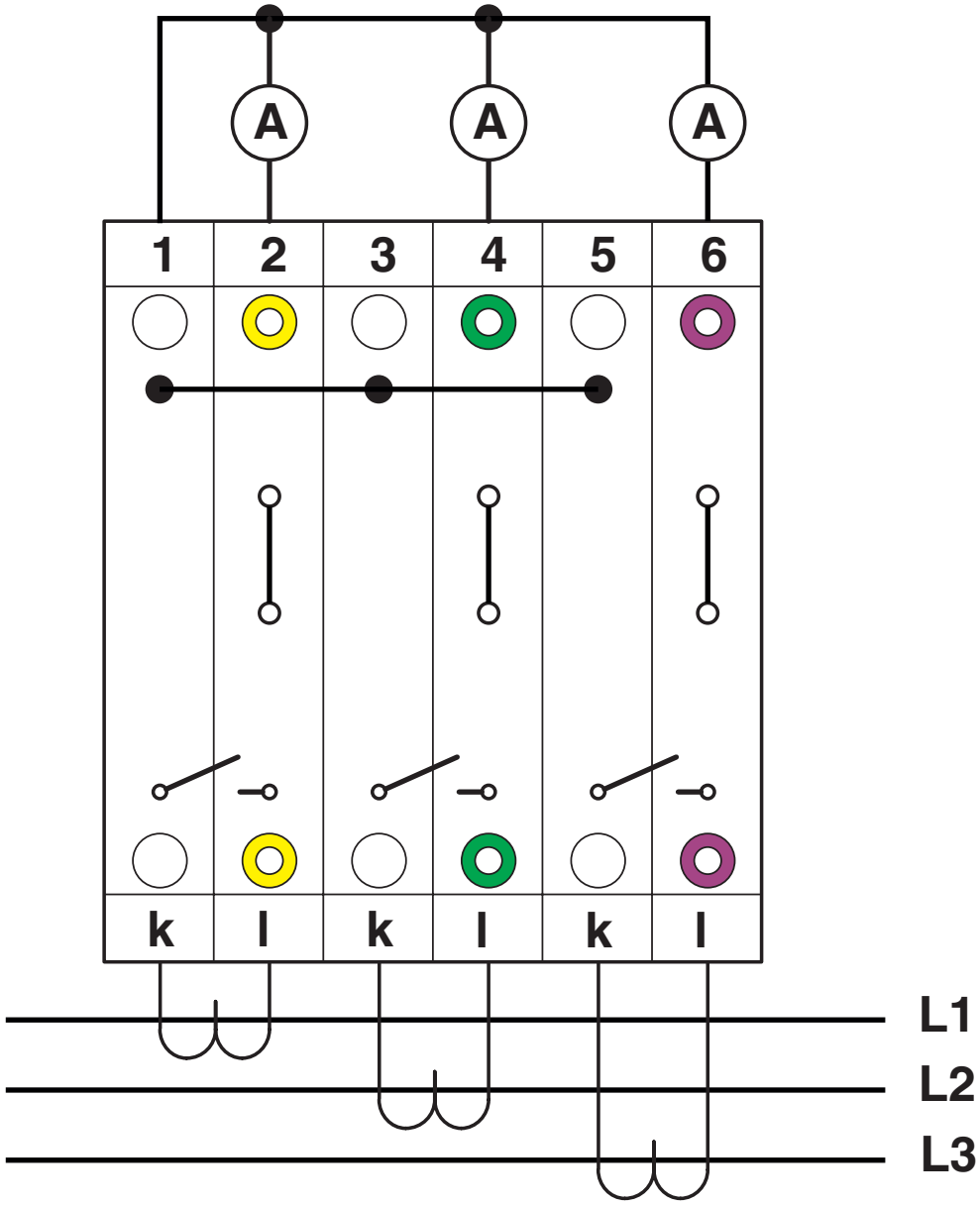

Connection diagram

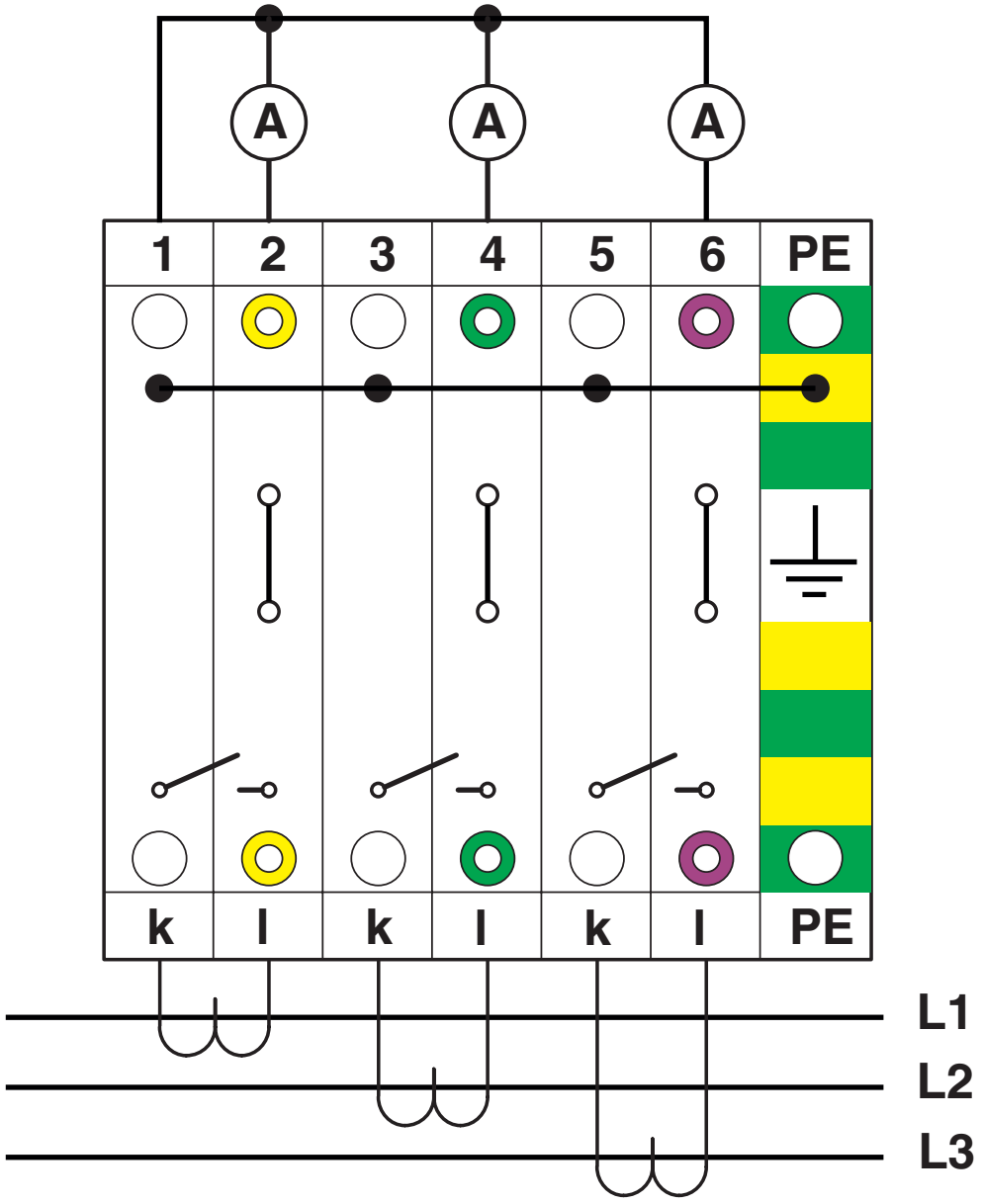

with PE terminals having the same contours

Connection diagram

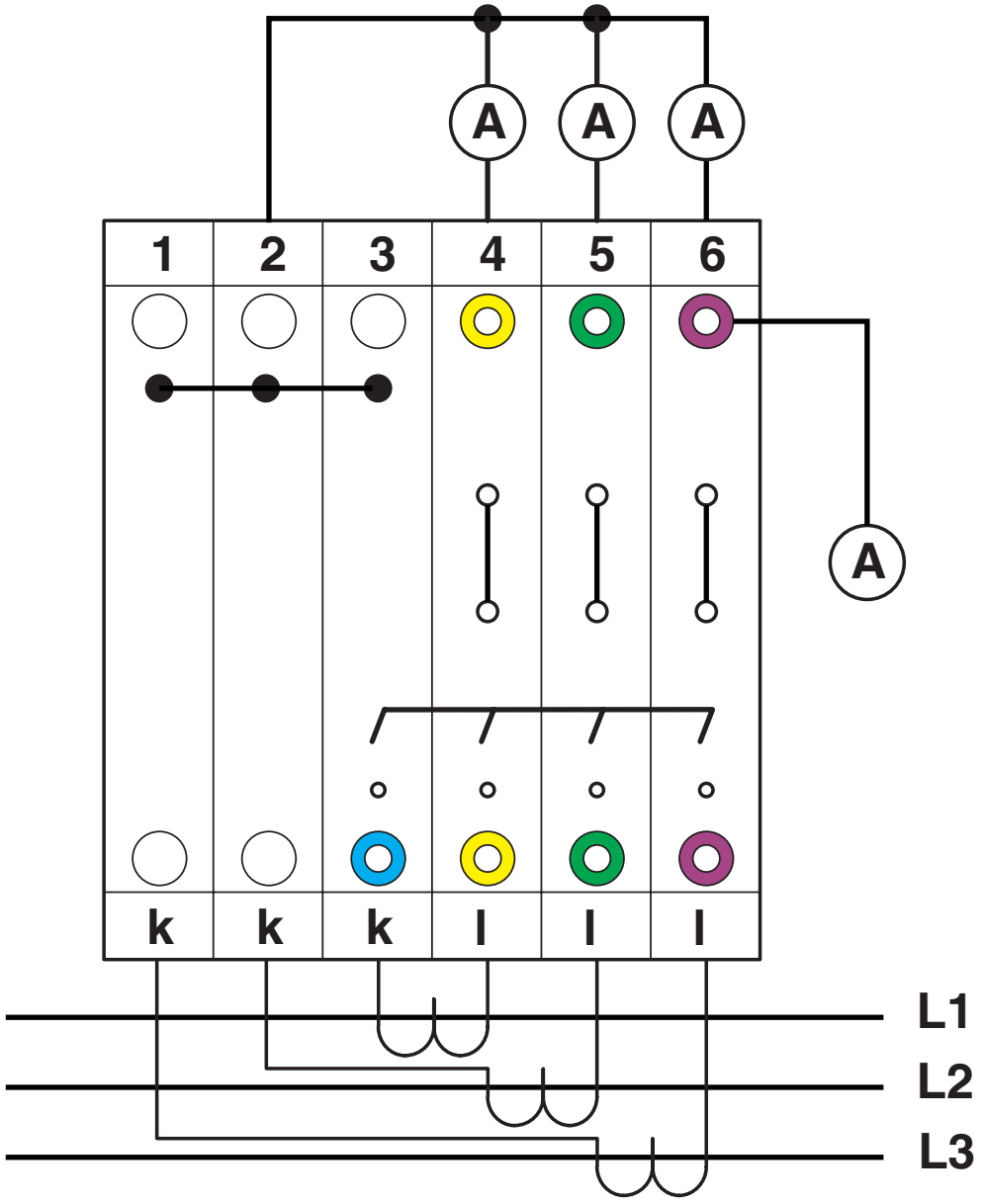

phase to phase

Connection diagram

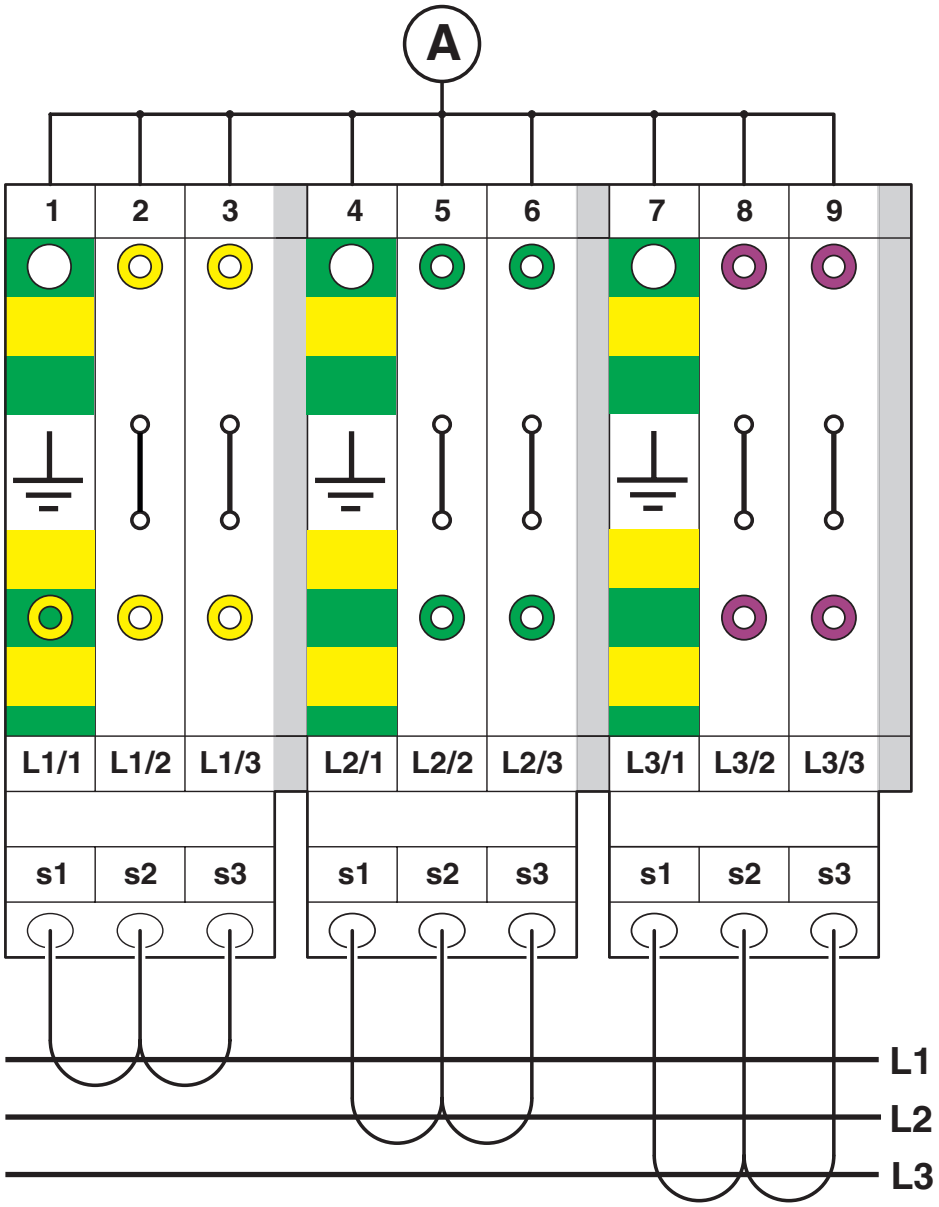

Schematic diagram

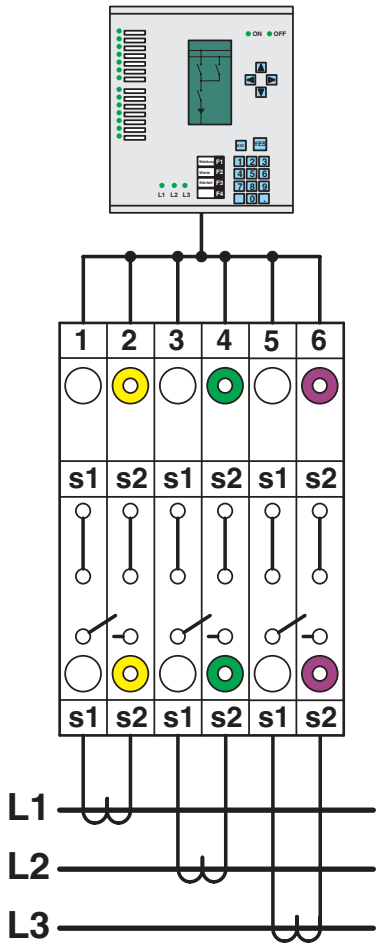

Simple three-phase current transformer set

Schematic diagram

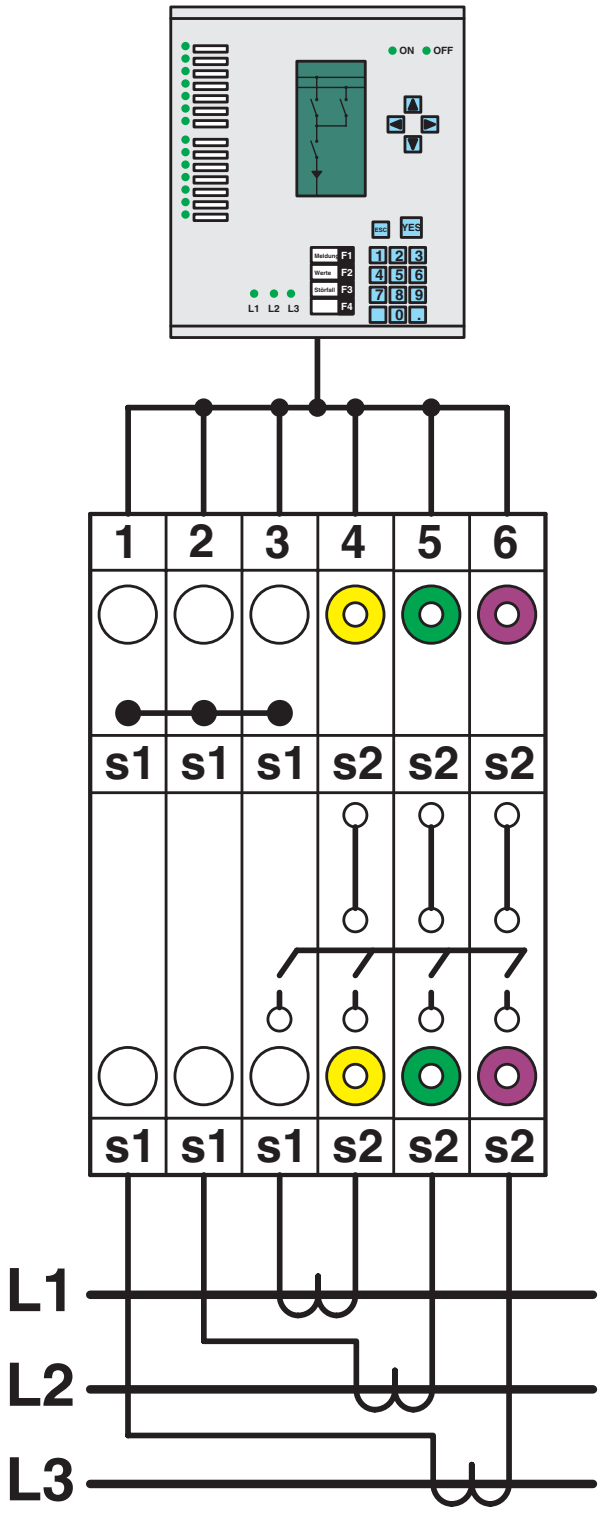

Interlinked three-phase current transformer set

Schematic diagram

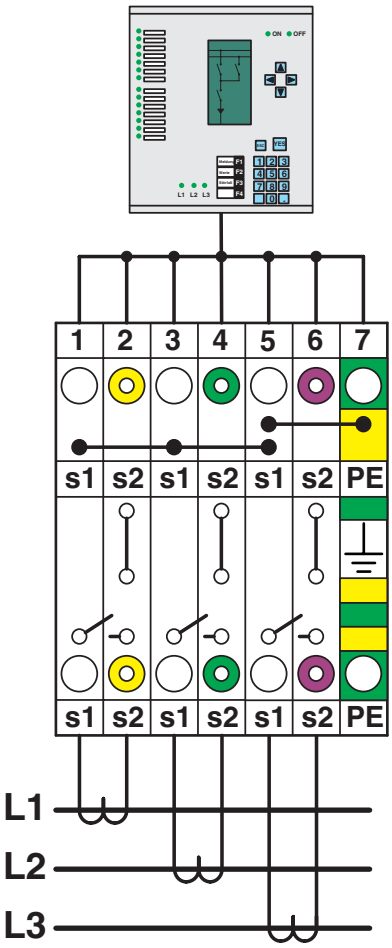

Interlinked three-phase current transformer set with grounded star point

Circuit diagram

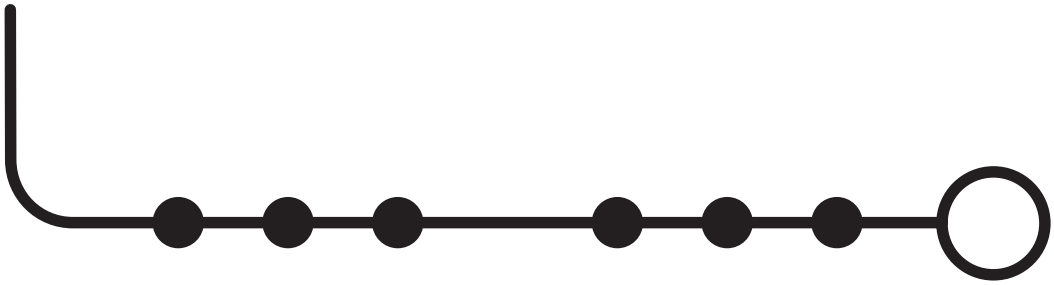

Circuit diagram

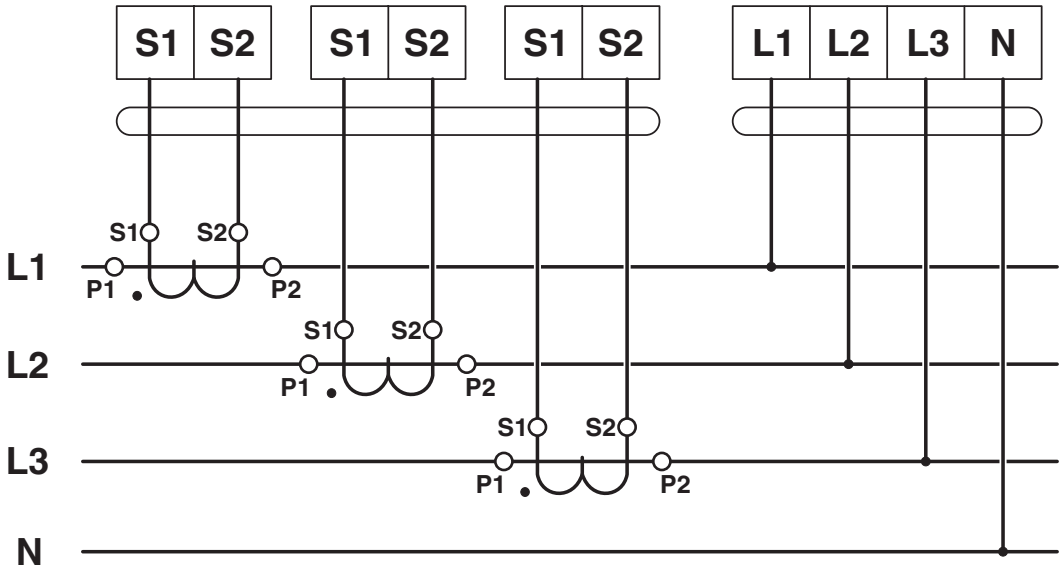

Circuit diagram

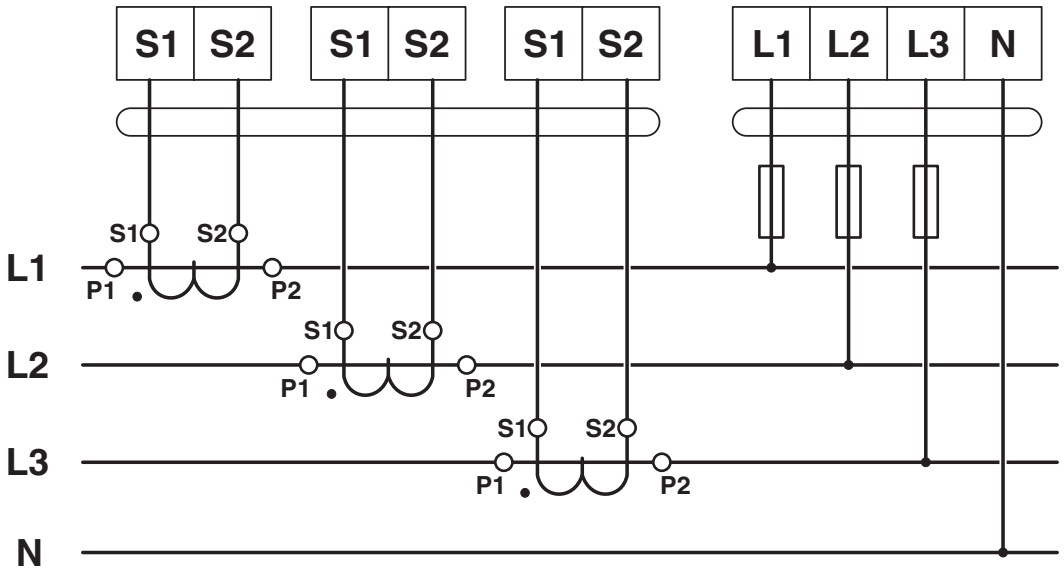

Circuit diagram

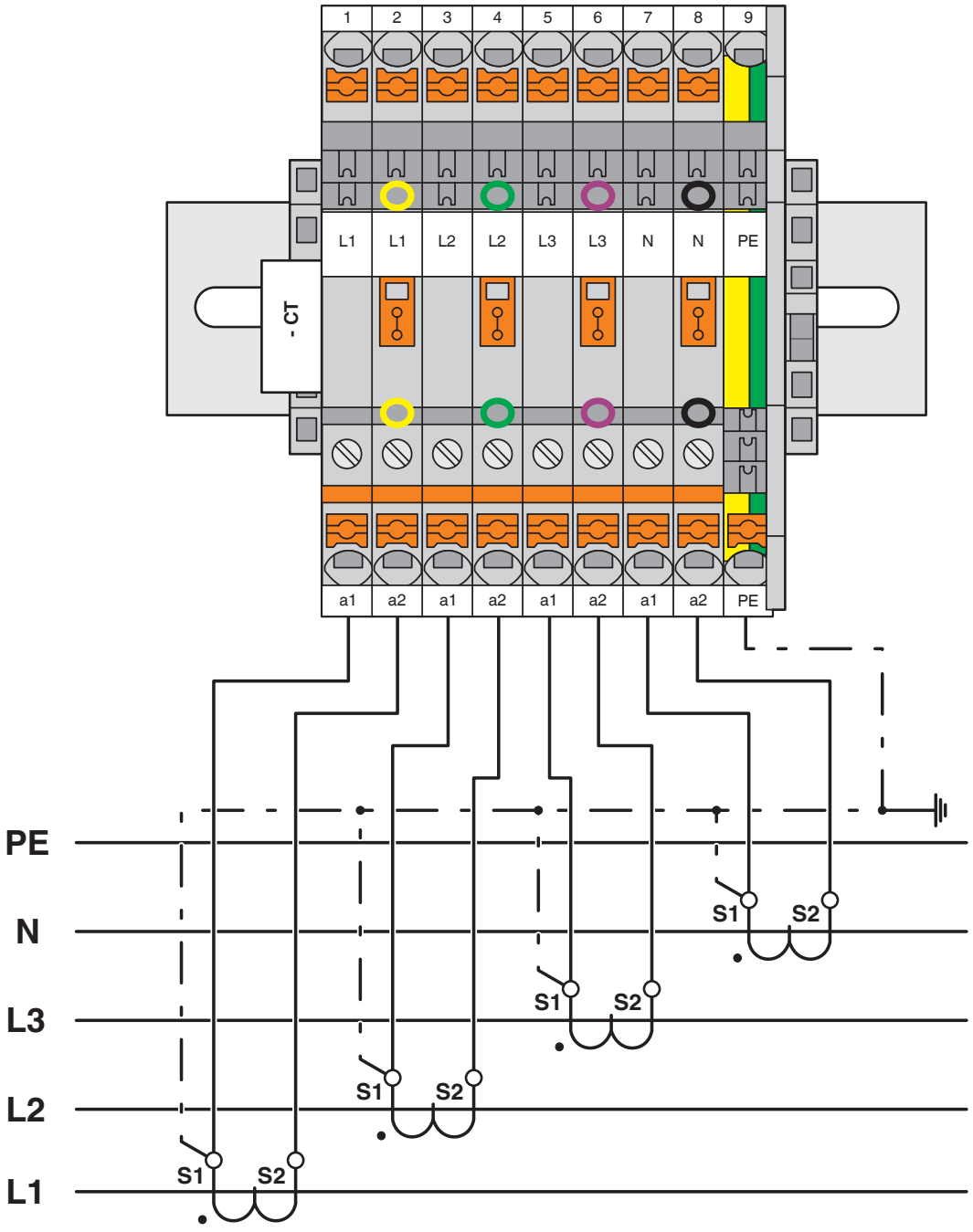

Circuit diagram

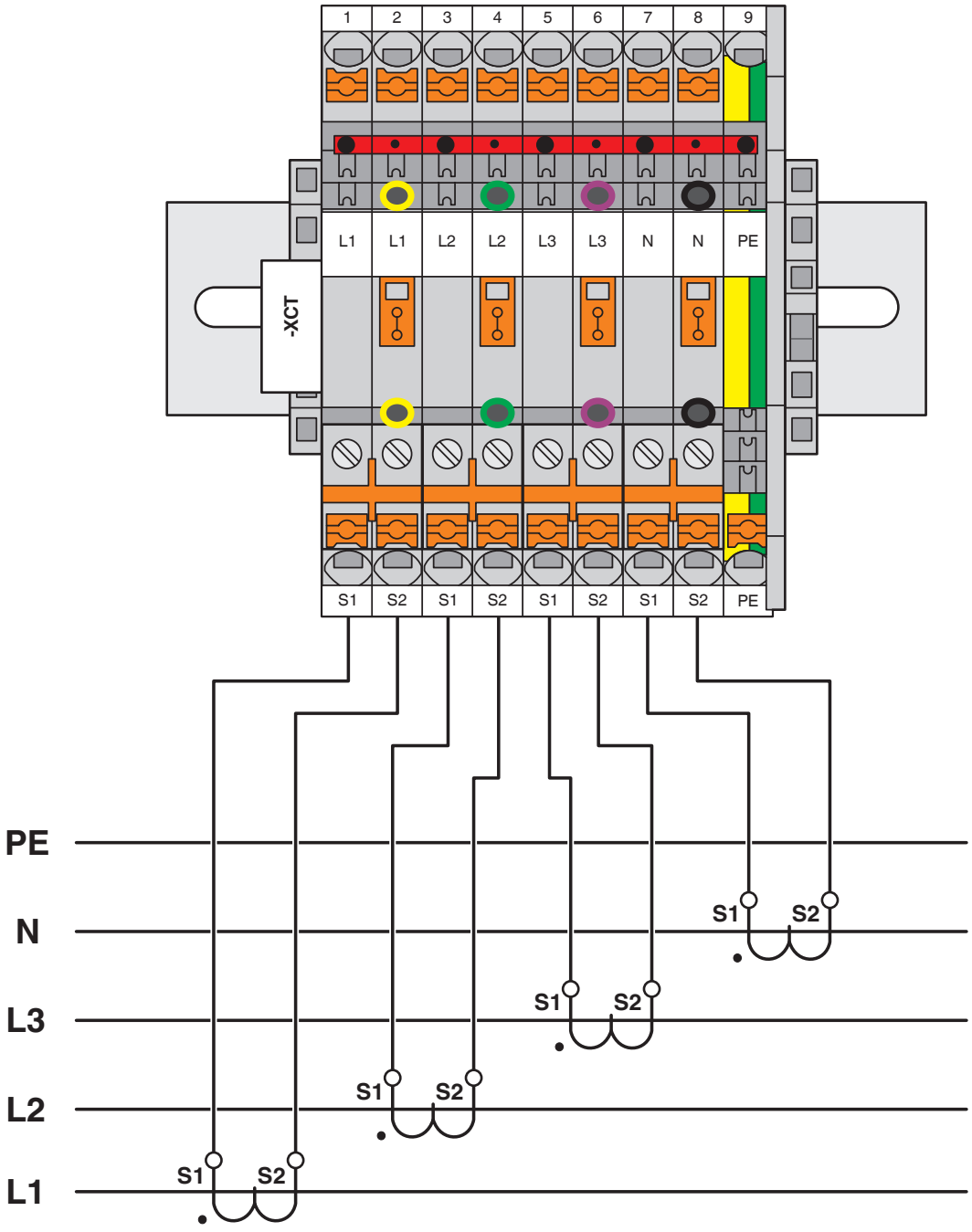

Circuit diagram

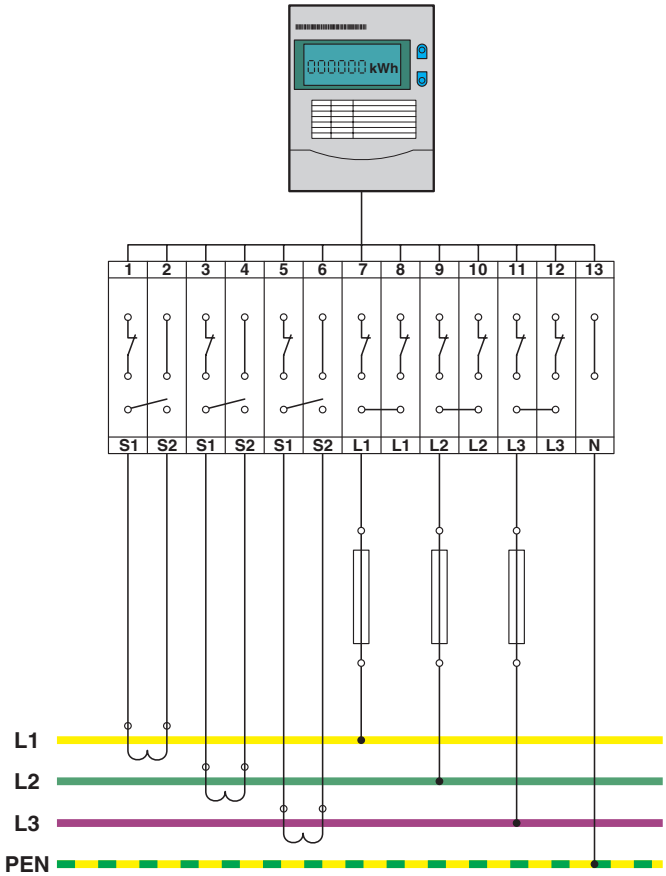

Approvals

To download certificates, visit the product detail page: https://www.phoenixcontact.com/us/products/3212301

CSA
Approval ID: 158887

	Nominal voltage U_N	Nominal current I_N	Cross section AWG	Cross section mm^2
B				
	300 V	30 A	20 - 8	-
C				
	300 V	30 A	20 - 8	-
D				
	600 V	5 A	20 - 8	-

EAC
Approval ID: RU C-DE.BL08.B.00644

cULus Recognized
Approval ID: E60425

	Nominal voltage U_N	Nominal current I_N	Cross section AWG	Cross section mm^2
B				
	300 V	30 A	20 - 8	-
C				
	300 V	30 A	20 - 8	-
D				
	600 V	5 A	20 - 8	-

EAC
Approval ID: KZ7500651131219505

Classifications

ECLASS

ECLASS-13.0	27250109
ECLASS-15.0	27250109

ETIM

ETIM 10.0	EC000902

UNSPSC

UNSPSC 21.0	39121400

Environmental product compliance

EU RoHS

Fulfills EU RoHS substance requirements	Yes, No exemptions

China RoHS

Environment friendly use period (EFUP)	EFUP-E
	No hazardous substances above the limits

EU REACH SVHC

REACH candidate substance (CAS No.)	No substance above 0.1 wt%

Phoenix Contact 2026 © - all rights reserved
https://www.phoenixcontact.com

Phoenix Contact USA
586 Fulling Mill Road
Middletown, PA 17057, United States
(+717) 944-1300
info@phoenixcon.com