# PP 2,5/ 1-L - Plug

3211271

https://www.phoenixcontact.com/us/products/3211271

Please be informed that the data shown in this PDF document is generated from our online catalog. Please find the complete data in the user documentation. Our general terms of use for downloads are valid.






Plug, left element, nom. voltage: 800 V, nominal current: 24 A, number of connections: 1, number of positions: 1, connection method: Push-in connection, Rated cross section: 2.5 mm$^2$, 1 level, cross section: 0.14 mm$^2$ - 4 mm$^2$, color: gray

## Your advantages

- Maximum safety, thanks to touch-proof design
- The Push-in technology COMBI plugs for self-assembly provide solutions that users can implement themselves
- Comprehensive, optional snap-on accessories available
- Safe to use, thanks to powerful, vibration-proof plug-in contact
- Flexible, thanks to plugs you can assemble yourself
- Protection against mismatching, thanks to individual coding options

## Commercial data

| | |
|---|---|
| Item number | 3211271 |
| Packing unit | 50 pc |
| Minimum order quantity | 50 pc |
| Sales key | BE22 |
| Product key | BE2244 |
| GTIN | 4055626285245 |
| Weight per piece (including packing) | 3.419 g |
| Weight per piece (excluding packing) | 3.408 g |
| Customs tariff number | 85366990 |
| Country of origin | PL |

# Technical data

## Notes

| | |
|---|---|
| Notes on operation | COMBI connectors are connectors without switching power in accordance with IEC 61984 and can be connected or disconnected without load or voltage when used as intended |

## Product properties

| | |
|---|---|
| Product type | Terminal plug |
| Area of application | Machine building |
| | Plant engineering |
| Number of positions | 1 |
| Pitch | 5.2 mm |
| Number of connections | 1 |
| Number of rows | 1 |
| Potentials | 1 |

### Insulation characteristics

| | |
|---|---|
| Overvoltage category | III |
| Degree of pollution | 3 |

## Electrical properties

| | |
|---|---|
| Rated surge voltage | 6 kV |
| Maximum power dissipation for nominal condition | 0.77 W |

## Connection data

| | |
|---|---|
| Number of connections per level | 1 |
| Nominal cross section | 2.5 mm² |

### 1 level

| | |
|---|---|
| Connection method | Push-in connection |
| Stripping length | 8 mm ... 10 mm |
| Internal cylindrical gage | A3 |
| Connection in acc. with standard | IEC 61984 |
| Conductor cross-section rigid | 0.14 mm² ... 4 mm² |
| Cross section AWG | 26 ... 12 (converted acc. to IEC) |
| Conductor cross-section flexible | 0.14 mm² ... 2.5 mm² |
| Conductor cross-section, flexible [AWG] | 26 ... 14 (converted acc. to IEC) |
| Conductor cross-section flexible (ferrule without plastic sleeve) | 0.14 mm² ... 2.5 mm² |
| Flexible conductor cross-section (ferrule with plastic sleeve) | 0.14 mm² ... 2.5 mm² |
| 2 conductors with the same cross section, flexible, with TWIN ferrule with plastic sleeve | 0.5 mm² |
| Nominal cross section | 2.5 mm² |
| Nominal current | 24 A |
| Maximum load current | 24 A (with 4 mm² conductor cross-section) |

| | |
|---|---|
| Nominal voltage | 800 V |

1 level Connection cross sections directly pluggable

| | |
|---|---|
| Conductor cross-section rigid | 0.34 mm² ... 4 mm² |
| Conductor cross-section flexible (ferrule without plastic sleeve) | 0.34 mm² ... 2.5 mm² |
| Flexible conductor cross-section (ferrule with plastic sleeve) | 0.34 mm² ... 2.5 mm² |

## Dimensions

| | |
|---|---|
| Width | 5.2 mm |
| Height | 16 mm |
| Depth | 41.2 mm |
| Pitch | 5.2 mm |

## Material specifications

| | |
|---|---|
| Color | gray (RAL 7042) |
| Flammability rating according to UL 94 | V0 |
| Insulating material group | I |
| Insulating material | PA |

## Mechanical properties

Mechanical data

| | |
|---|---|
| Open side panel | No |

## Environmental and real-life conditions

Ambient conditions

| | |
|---|---|
| Ambient temperature (operation) | -60 °C (max. operating temperature see derating curve) |
| Ambient temperature (storage/transport) | -25 °C ... 60 °C (for a short time, not exceeding 24 h, -60 °C to +70 °C) |
| Ambient temperature (assembly) | -5 °C ... 70 °C |
| Ambient temperature (actuation) | -5 °C ... 70 °C |
| Permissible humidity (operation) | 20 % ... 90 % |
| Permissible humidity (storage/transport) | 30 % ... 70 % |

## Standards and regulations

| | |
|---|---|
| Connection in acc. with standard | IEC 61984 |

## Mounting

| | |
|---|---|
| Assembly note | Use of a parallel pressing tool is recommended for easy latching of the COMBI connector and coupling elements for self-assembly |

## Drawings

Schematic diagram

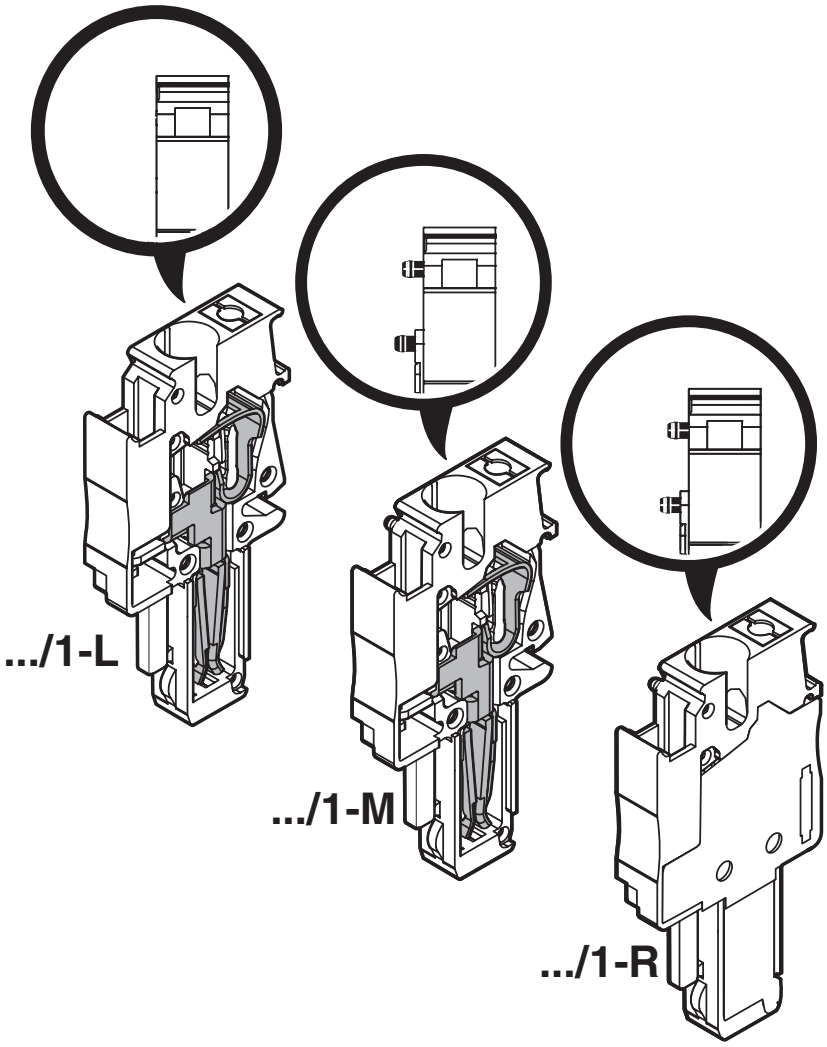

Circuit diagram



## Approvals

To download certificates, visit the product detail page: https://www.phoenixcontact.com/us/products/3211271

**CSA**
Approval ID: 158887

| | Nominal voltage $U_N$ | Nominal current $I_N$ | Cross section AWG | Cross section $mm^2$ |
|---|---|---|---|---|
| B | | | | |
| | 600 V | 20 A | 26 - 12 | - |
| C | | | | |
| | 600 V | 20 A | 26 - 12 | - |

**cULus Recognized**
Approval ID: E60425

| | Nominal voltage $U_N$ | Nominal current $I_N$ | Cross section AWG | Cross section $mm^2$ |
|---|---|---|---|---|
| B | | | | |
| | 600 V | 20 A | 26 - 12 | - |
| C | | | | |
| | 600 V | 20 A | 26 - 12 | - |

**EAC**
Approval ID: KZ7500651131219505

## Classifications

### ECLASS

| | |
|---|---|
| ECLASS-13.0 | 27250306 |
| ECLASS-15.0 | 27250306 |

### ETIM

| | |
|---|---|
| ETIM 10.0 | EC002021 |

### UNSPSC

| | |
|---|---|
| UNSPSC 21.0 | 39121400 |

## Environmental product compliance

EU RoHS

| | |
|---|---|
| Fulfills EU RoHS substance requirements | Yes, No exemptions |

China RoHS

| | |
|---|---|
| Environment friendly use period (EFUP) | EFUP-E |
| | No hazardous substances above the limits |

EU REACH SVHC

| | |
|---|---|
| REACH candidate substance (CAS No.) | No substance above 0.1 wt% |

Phoenix Contact 2026 © - all rights reserved
https://www.phoenixcontact.com

Phoenix Contact USA
586 Fulling Mill Road
Middletown, PA 17057, United States
(+717) 944-1300
info@phoenixcon.com