UTME 6 - Test disconnect terminal block

3047400

https://www.phoenixcontact.com/us/products/3047400

Please be informed that the data shown in this PDF document is generated from our online catalog. Please find the complete data in the user documentation. Our general terms of use for downloads are valid.





Test disconnect terminal block, nom. voltage: 500 V, nominal current: 30 A, 1 level, connection method: Screw connection, Rated cross section: 6 mm^2, cross section: 0.2 mm^2 - 10 mm^2, mounting: NS 35/7,5, NS 35/15, color: gray

Your advantages

- Feed-through terminal blocks of the same shape are available
- Clear
- Clear selection thanks to printed switching symbols
- Easy operation
- Six function shafts
- Compact design
- Flexible and comprehensive accessories
- Reliably snapped into the end positions

Commercial data

Item number	3047400
Packing unit	50 pc
Minimum order quantity	50 pc
Sales key	BE01
Product key	BE1133
GTIN	4046356291101
Weight per piece (including packing)	29.102 g
Weight per piece (excluding packing)	29.102 g
Customs tariff number	85369010
Country of origin	PL

Technical data

Product properties

Product type	Test disconnect terminal block
Number of connections	2
Number of rows	1
Potentials	1

Insulation characteristics

Overvoltage category	III
Degree of pollution	3

Electrical properties

Rated surge voltage	6 kV
Maximum power dissipation for nominal condition	1.31 W

Connection data

Number of connections per level	2
Nominal cross section	6 mm²

1 level

Connection method	Screw connection
Screw thread	M4
Tightening torque	1.5 ... 1.8 Nm
Stripping length	10 mm
Internal cylindrical gage	A5
Connection in acc. with standard	IEC 60947-7-1
Conductor cross-section rigid	0.2 mm² ... 10 mm²
Cross section AWG	24 ... 8 (converted acc. to IEC)
Conductor cross-section flexible	0.2 mm² ... 10 mm²
Conductor cross-section, flexible [AWG]	24 ... 8 (converted acc. to IEC)
Conductor cross-section flexible (ferrule without plastic sleeve)	0.25 mm² ... 6 mm²
Flexible conductor cross-section (ferrule with plastic sleeve)	0.25 mm² ... 6 mm²
2 conductors with same cross section, rigid	0.2 mm² ... 2.5 mm²
2 conductors with same cross section, flexible	0.2 mm² ... 2.5 mm²
2 conductors with same cross section, flexible, with ferrule without plastic sleeve	0.25 mm² ... 1.5 mm²
2 conductors with the same cross section, flexible, with TWIN ferrule with plastic sleeve	0.5 mm² ... 4 mm²
Nominal cross section	6 mm²
Nominal current	30 A
Maximum load current	30 A (with 10 mm² conductor cross-section)
Nominal voltage	500 V

Dimensions

Width	8.2 mm
End cover width	2.2 mm
Height	100.8 mm
Depth on NS 35/7,5	49.6 mm
Depth on NS 35/15	57.1 mm

Material specifications

Color	gray (RAL 7042)
Flammability rating according to UL 94	V0
Insulating material group	I
Insulating material	PA
Static insulating material application in cold	-60 °C
Relative insulation material temperature index (Elec., UL 746 B)	130 °C
Fire protection for rail vehicles (DIN EN 45545-2) R22	HL 1 - HL 3
Fire protection for rail vehicles (DIN EN 45545-2) R23	HL 1 - HL 3
Fire protection for rail vehicles (DIN EN 45545-2) R24	HL 1 - HL 3
Fire protection for rail vehicles (DIN EN 45545-2) R26	HL 1 - HL 3
Surface flammability NFPA 130 (ASTM E 162)	passed
Specific optical density of smoke NFPA 130 (ASTM E 662)	passed
Smoke gas toxicity NFPA 130 (SMP 800C)	passed

Electrical tests

Surge voltage test

Test voltage setpoint	7.3 kV
Result	Test passed

Temperature-rise test

Requirement temperature-rise test	Increase in temperature ≤ 45 K
Result	Test passed
Short-time withstand current 6 mm²	0.72 kA
Short-time withstand current 4 mm²	0.5 kA
	0.15 kA
Result	Test passed

Power-frequency withstand voltage

Test voltage setpoint	1.89 kV
Result	Test passed

Mechanical properties

Mechanical data

Open side panel	Yes

Mechanical tests

Mechanical strength

Result	Test passed

Attachment on the carrier

DIN rail/fixing support	NS 35
Test force setpoint	5 N
Result	Test passed

Test for conductor damage and slackening

Rotation speed	10 rpm
Revolutions	135
Conductor cross-section/weight	0.2 mm² / 0.2 kg
	6 mm² / 1.4 kg
	10 mm² / 2 kg
Result	Test passed

Environmental and real-life conditions

Needle-flame test

Time of exposure	30 s
Result	Test passed

Oscillation/broadband noise

Specification	DIN EN 50155 (VDE 0115-200):2008-03
Spectrum	Long life test category 2, bogie-mounted
Frequency	f_1 = 5 Hz to f_2 = 250 Hz
ASD level	11.83 (m/s²)²/Hz
Acceleration	4.25g
Test duration per axis	5 h
Test directions	X-, Y- and Z-axis
Result	Test passed

Shocks

Specification	DIN EN 50155 (VDE 0115-200):2008-03
Pulse shape	Half-sine
Acceleration	30g
Shock duration	18 ms
Number of shocks per direction	3
Test directions	X-, Y- and Z-axis (pos. and neg.)
Result	Test passed

Ambient conditions

Ambient temperature (operation)	-60 °C ... 110 °C (Operating temperature range incl. self-heating; for max. short-term operating temperature, see RTI Elec.)
Ambient temperature (storage/transport)	-25 °C ... 60 °C (for a short time, not exceeding 24 h, -60 °C to +70 °C)
Ambient temperature (assembly)	-5 °C ... 70 °C
Ambient temperature (actuation)	-5 °C ... 70 °C

Permissible humidity (operation)	20 % ... 90 %
Permissible humidity (storage/transport)	30 % ... 70 %

Standards and regulations

Connection in acc. with standard	IEC 60947-7-1

Mounting

Mounting type	NS 35/7,5
	NS 35/15

Drawings

Schematic diagram

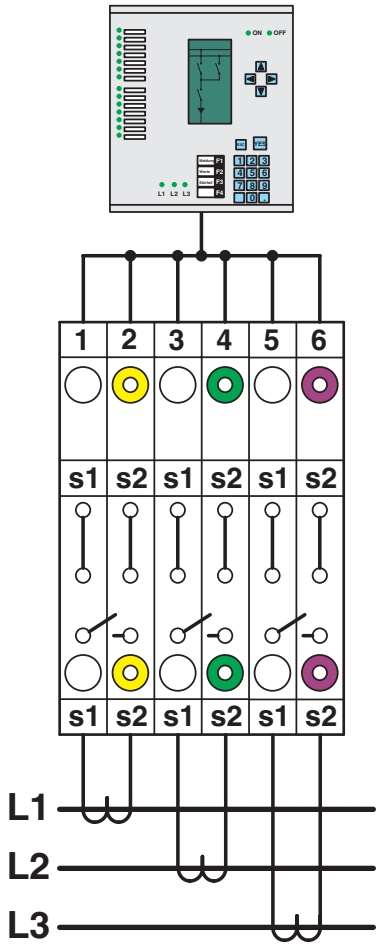

Simple three-phase current transformer set

Schematic diagram

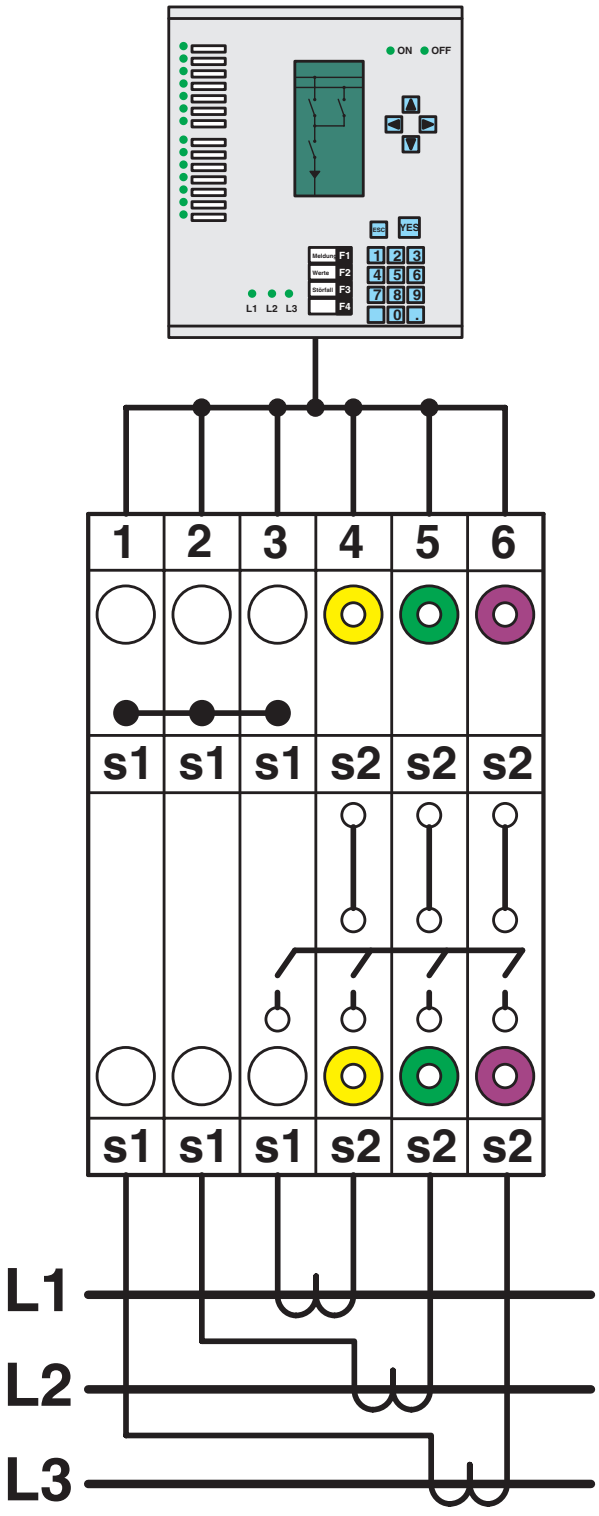

Interlinked three-phase current transformer set

Schematic diagram

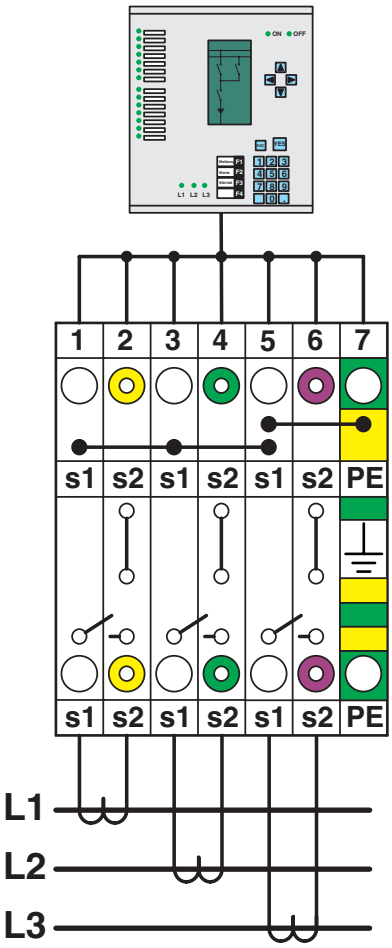

Interlinked three-phase current transformer set with grounded star point

Circuit diagram

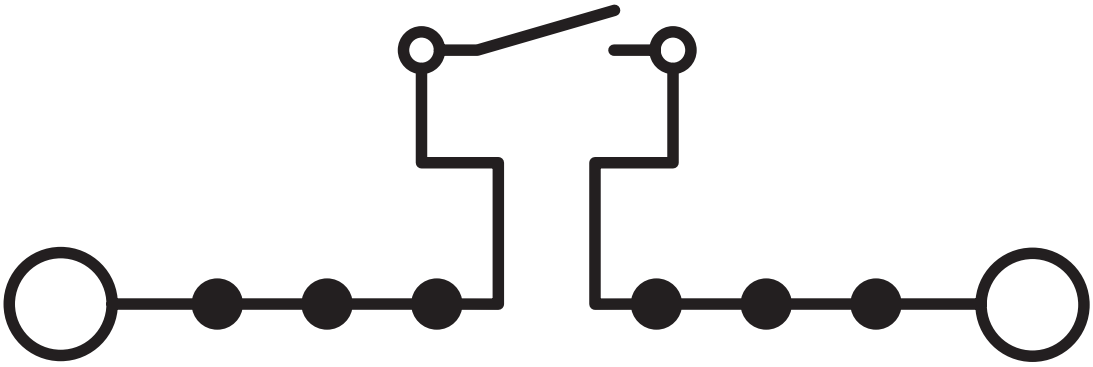

Circuit diagram

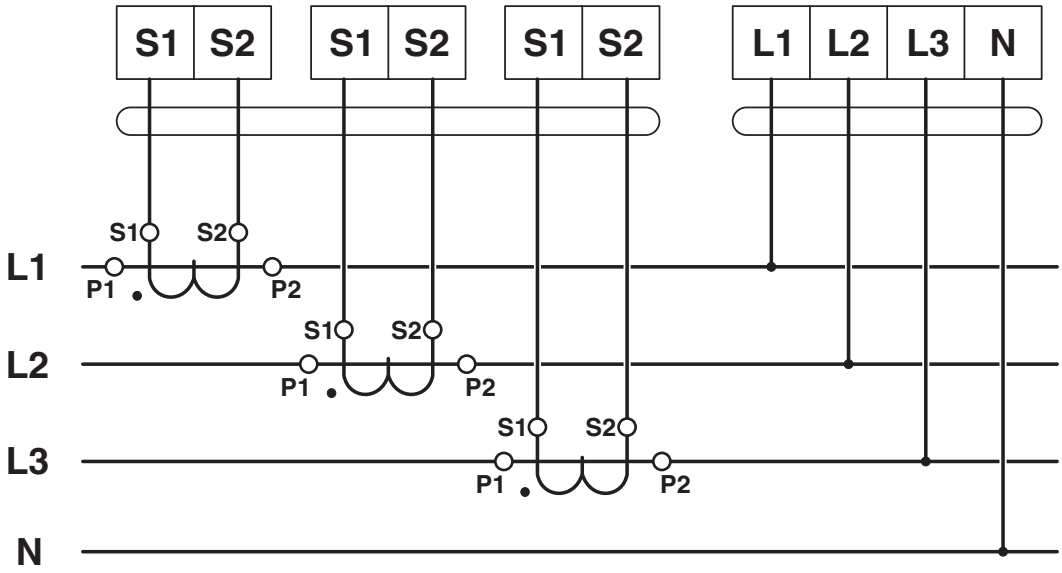

Circuit diagram

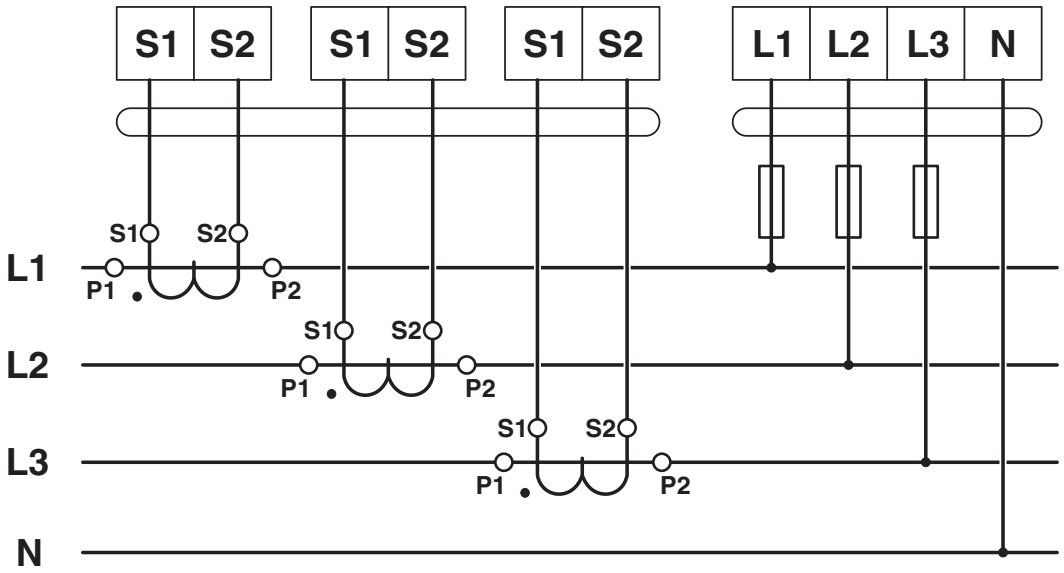

Approvals

To download certificates, visit the product detail page: https://www.phoenixcontact.com/us/products/3047400

CSA
Approval ID: 13631

	Nominal voltage U_N	Nominal current I_N	Cross section AWG	Cross section mm^2
B				
	300 V	30 A	24 - 8	-
C				
	300 V	30 A	24 - 8	-
D				
	600 V	5 A	24 - 8	-

EAC
Approval ID: KZ7500651131219505

cULus Recognized
Approval ID: E60425

	Nominal voltage U_N	Nominal current I_N	Cross section AWG	Cross section mm^2
B				
	300 V	30 A	24 - 8	-
Multi-conductor connection	300 V	30 A	24 - 12	-
C				
	300 V	30 A	24 - 8	-
Multi-conductor connection	300 V	30 A	24 - 12	-
D				
	600 V	5 A	24 - 8	-
Multi-conductor connection	600 V	5 A	24 - 12	-

Classifications

ECLASS

ECLASS-13.0	27250109
ECLASS-15.0	27250109

ETIM

ETIM 10.0	EC000902

UNSPSC

UNSPSC 21.0	39121400

Environmental product compliance

EU RoHS

Fulfills EU RoHS substance requirements	Yes
Exemption	6(c)

China RoHS

Environment friendly use period (EFUP)	EFUP-50
	An article-related China RoHS declaration table can be found in the download area for the respective article under "Manufacturer declaration". For all articles with EFUP-E, no China RoHS declaration table issued and required.

EU REACH SVHC

REACH candidate substance (CAS No.)	Lead(CAS: 7439-92-1)
SCIP	e54f44b9-75f5-4e87-80f0-b1fc3454426b

EF3.1 Climate Change

CO2e kg	0.454 kg CO2e

Phoenix Contact 2026 © - all rights reserved
https://www.phoenixcontact.com

Phoenix Contact USA
586 Fulling Mill Road
Middletown, PA 17057, United States
(+717) 944-1300
info@phoenixcon.com