UPBV 2,5/ 1-R GNYE - Plug

3045392

https://www.phoenixcontact.com/us/products/3045392

Please be informed that the data shown in this PDF document is generated from our online catalog. Please find the complete data in the user documentation. Our general terms of use for downloads are valid.



Plug, nom. voltage: 500 V, nominal current: 24 A, number of positions: 1, connection method: Screw connection, Rated cross section: 2.5 mm^2, cross section: 0.14 mm^2- 4 mm^2, color: green-yellow

Product description

Connector element right, left housing with engagement pin, right closed with cover

Your advantages

- The screw plugs can be combined with COMBI terminal blocks with all forms of connection technology and are available in two versions
- Can be bridged with FBS ... standard bridges
- The COMBI plugs for self-assembly provide solutions that users can implement themselves
- The plugs are assembled directly on site by snapping together 1-position plug elements
- The connected conductors can be led directly into the cable duct to save space

Commercial data

Item number	3045392
Packing unit	50 pc
Minimum order quantity	50 pc
Sales key	BE01
Product key	BE1144
GTIN	4046356055604
Weight per piece (including packing)	5.746 g
Weight per piece (excluding packing)	5.195 g
Customs tariff number	85366990
Country of origin	TR

Technical data

Notes

Notes on operation	COMBI connectors are connectors without switching power in accordance with IEC 61984 and can be connected or disconnected without load or voltage when used as intended

Product properties

Product type	Terminal plug
Number of positions	1
Pitch	5.2 mm
Potentials	1

Insulation characteristics

Overvoltage category	III
Degree of pollution	3

Electrical properties

Rated surge voltage	6 kV

Connection data

Nominal cross section	2.5 mm²
Connection method	Screw connection
Screw thread	M3
Tightening torque	0.5 ... 0.6 Nm
Stripping length	9 mm
Internal cylindrical gage	A3
Connection in acc. with standard	IEC 61984
Conductor cross-section rigid	0.14 mm² ... 4 mm²
Cross section AWG	26 ... 12 (converted acc. to IEC)
Conductor cross-section flexible	0.14 mm² ... 4 mm²
Conductor cross-section, flexible [AWG]	26 ... 12 (converted acc. to IEC)
Conductor cross-section flexible (ferrule without plastic sleeve)	0.14 mm² ... 2.5 mm²
Flexible conductor cross-section (ferrule with plastic sleeve)	0.14 mm² ... 2.5 mm²
2 conductors with same cross section, rigid	0.14 mm² ... 1.5 mm²
2 conductors with same cross section, flexible	0.14 mm² ... 1.5 mm²
2 conductors with same cross section, flexible, with ferrule without plastic sleeve	0.14 mm² ... 1.5 mm²
2 conductors with the same cross section, flexible, with TWIN ferrule with plastic sleeve	0.5 mm² ... 1 mm²
Nominal cross section	2.5 mm²
Nominal current	24 A
Maximum load current	24 A (with 4 mm² conductor cross-section)
Nominal voltage	500 V

Dimensions

Width	5.2 mm
Height	20.5 mm
Depth	47 mm
Length	20.5 mm
Pitch	5.2 mm

Material specifications

Color	green-yellow
Flammability rating according to UL 94	V0
Insulating material group	I
Insulating material	PA
Static insulating material application in cold	-60 °C
Temperature index of insulation material (DIN EN 60216-1 (VDE 0304-21))	130 °C
Relative insulation material temperature index (Elec., UL 746 B)	130 °C
Fire protection for rail vehicles (DIN EN 45545-2) R22	HL 1 - HL 3
Fire protection for rail vehicles (DIN EN 45545-2) R23	HL 1 - HL 3
Fire protection for rail vehicles (DIN EN 45545-2) R24	HL 1 - HL 3
Fire protection for rail vehicles (DIN EN 45545-2) R26	HL 1 - HL 3
Calorimetric heat release NFPA 130 (ASTM E 1354)	28 MJ/kg
Surface flammability NFPA 130 (ASTM E 162)	passed
Specific optical density of smoke NFPA 130 (ASTM E 662)	passed
Smoke gas toxicity NFPA 130 (SMP 800C)	passed

Environmental and real-life conditions

Ambient conditions

Ambient temperature (operation)	-60 °C (max. operating temperature see derating curve)
Ambient temperature (storage/transport)	-25 °C ... 60 °C (for a short time, not exceeding 24 h, -60 °C to +70 °C)
Ambient temperature (assembly)	-5 °C ... 70 °C
Ambient temperature (actuation)	-5 °C ... 70 °C
Permissible humidity (operation)	20 % ... 90 %
Permissible humidity (storage/transport)	30 % ... 70 %

Standards and regulations

Connection in acc. with standard	IEC 61984

Drawings

Schematic diagram

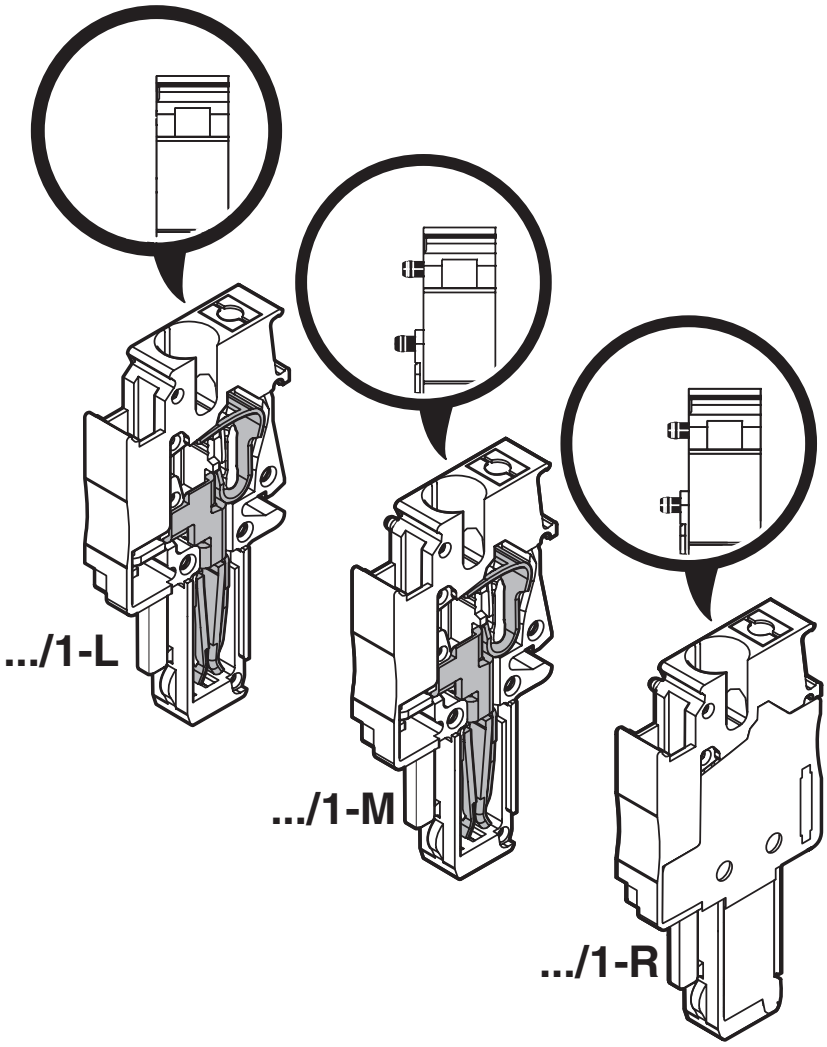

Diagram

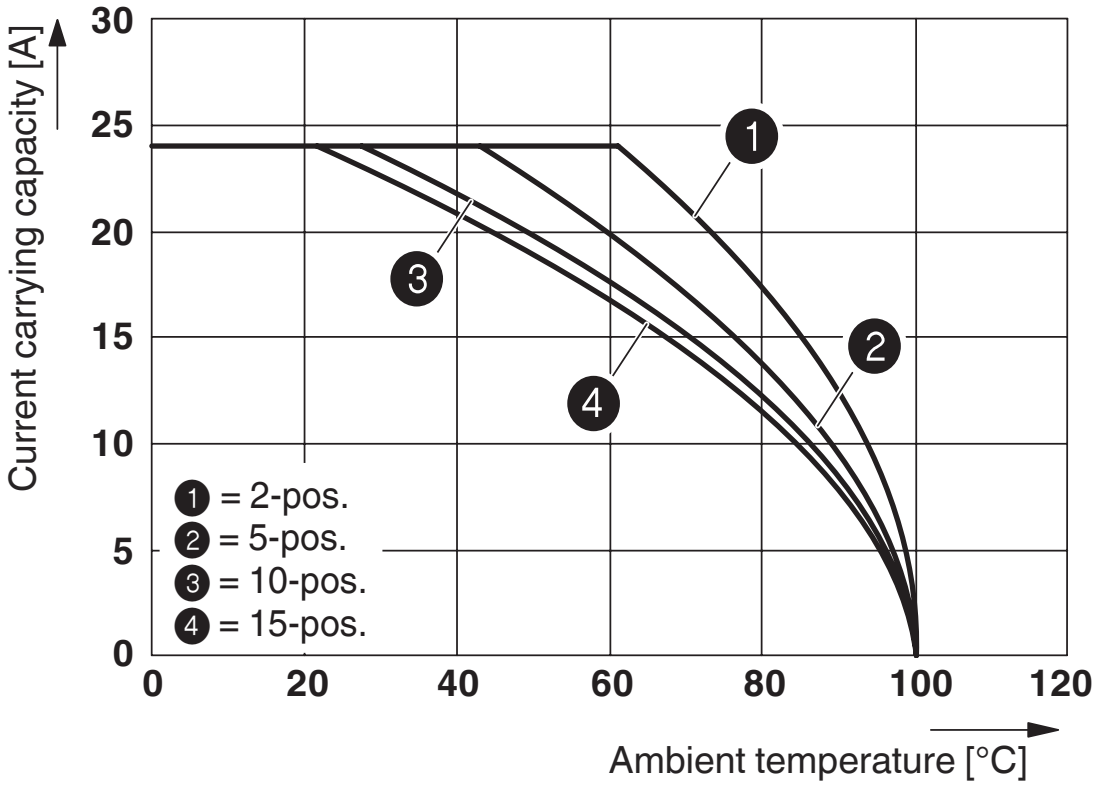

The figure shows the derating curve of the UT 2,5/1P... terminal block in connection with the UPBV 2,5 plug

Circuit diagram



Approvals

To download certificates, visit the product detail page: https://www.phoenixcontact.com/us/products/3045392

cULus Recognized
Approval ID: E60425

	Nominal voltage U_N	Nominal current I_N	Cross section AWG	Cross section mm^2
B				
	600 V	20 A	26 - 12	-
Multi-conductor connection	600 V	20 A	26 - 16	-
C				
	600 V	20 A	26 - 12	-
Multi-conductor connection	600 V	20 A	26 - 16	-
D				
	600 V	5 A	26 - 12	-
Multi-conductor connection	600 V	5 A	26 - 16	-

EAC
Approval ID: KZ7500651131219505

Classifications

ECLASS

ECLASS-13.0	27250306
ECLASS-15.0	27250306

ETIM

ETIM 10.0	EC002021

UNSPSC

UNSPSC 21.0	39121400

Environmental product compliance

EU RoHS

Fulfills EU RoHS substance requirements	Yes
Exemption	6(c)

China RoHS

Environment friendly use period (EFUP)	EFUP-50
	An article-related China RoHS declaration table can be found in the download area for the respective article under "Manufacturer declaration". For all articles with EFUP-E, no China RoHS declaration table issued and required.

EU REACH SVHC

REACH candidate substance (CAS No.)	Lead(CAS: 7439-92-1)
SCIP	c4118911-b4e4-4434-bf60-0149abe8c47d

EF3.1 Climate Change

CO2e kg	0.034 kg CO2e

Phoenix Contact 2026 © - all rights reserved
https://www.phoenixcontact.com

Phoenix Contact USA
586 Fulling Mill Road
Middletown, PA 17057, United States
(+717) 944-1300
info@phoenixcon.com