UT 2,5/1P-PE - Protective conductor terminal block

3045033

https://www.phoenixcontact.com/us/products/3045033

Please be informed that the data shown in this PDF document is generated from our online catalog. Please find the complete data in the user documentation. Our general terms of use for downloads are valid.





Protective conductor terminal block, Current and voltage are determined by the plug used., number of connections: 2, connection method: Screw/plug-in connection, Rated cross section: 2.5 mm², cross section: 0.14 mm² - 4 mm², mounting type: NS 35/7,5, NS 35/15, color: green-yellow

Your advantages

- Same shape and pitch as the feed-through terminal blocks
- Contact is made free from mechanical and electrical errors by simply snapping onto the DIN rail
- All the requirements of standards IEC 61984 and IEC 60947-7-2 are met

Commercial data

Item number	3045033
Packing unit	50 pc
Minimum order quantity	50 pc
Sales key	BE01
Product key	BE1142
GTIN	4017918975371
Weight per piece (including packing)	11.004 g
Weight per piece (excluding packing)	10.516 g
Customs tariff number	85369010
Country of origin	TR

Technical data

Notes

General	Current and voltage are determined by the plug used.

Product properties

Product type	Ground terminal block
Product family	UT
Number of connections	2
Number of rows	1

Insulation characteristics

Overvoltage category	III
Degree of pollution	3

Electrical properties

Rated surge voltage	6 kV

Connection data

Grounding foot	Yes
Number of connections per level	2
Nominal cross section	2.5 mm²
Rated cross section AWG	12

Level 1 above 1 below 1

Connection method	Screw/plug-in connection
Screw thread	M3
Note	Please observe the current carrying capacity of the DIN rails.
Tightening torque	0.6 ... 0.8 Nm
Stripping length	9 mm
Internal cylindrical gage	A3
Connection in acc. with standard	IEC 61984
Conductor cross-section rigid	0.14 mm² ... 4 mm²
Cross section AWG	26 ... 12 (converted acc. to IEC)
Conductor cross-section flexible	0.14 mm² ... 4 mm²
Conductor cross-section, flexible [AWG]	26 ... 12 (converted acc. to IEC)
Conductor cross-section flexible ultrasound-compressed	0.34 mm² ... 4 mm²
Conductor cross-section, flexible [AWG] ultrasound-compressed	22 ... 12 (converted acc. to IEC)
Conductor cross-section flexible (ferrule without plastic sleeve)	0.14 mm² ... 2.5 mm²
Flexible conductor cross-section (ferrule with plastic sleeve)	0.14 mm² ... 2.5 mm²
Nominal cross section	2.5 mm²

Dimensions

Dimensional drawing	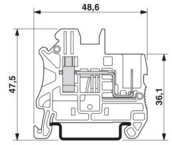
Width	5.2 mm
End cover width	2.2 mm
Height	49.1 mm
Depth on NS 35/7,5	47.5 mm
Depth on NS 35/15	55 mm

Material specifications

Color	green-yellow
Flammability rating according to UL 94	V0
Insulating material group	I
Insulating material	PA
Static insulating material application in cold	-60 °C
Temperature index of insulation material (DIN EN 60216-1 (VDE 0304-21))	130 °C
Relative insulation material temperature index (Elec., UL 746 B)	130 °C
Fire protection for rail vehicles (DIN EN 45545-2) R22	HL 1 - HL 3
Fire protection for rail vehicles (DIN EN 45545-2) R23	HL 1 - HL 3
Fire protection for rail vehicles (DIN EN 45545-2) R24	HL 1 - HL 3
Fire protection for rail vehicles (DIN EN 45545-2) R26	HL 1 - HL 3
Calorimetric heat release NFPA 130 (ASTM E 1354)	28 MJ/kg
Surface flammability NFPA 130 (ASTM E 162)	passed
Specific optical density of smoke NFPA 130 (ASTM E 662)	passed
Smoke gas toxicity NFPA 130 (SMP 800C)	passed

Mechanical properties

Mechanical data

Open side panel	Yes

Environmental and real-life conditions

Service life

Insertion/withdrawal cycles	100

Oscillation/broadband noise

Specification	DIN EN 50155 (VDE 0115-200):2018-05
Spectrum	Long life test category 1, class B, body mounted
Frequency	f_1 = 5 Hz to f_2 = 150 Hz
ASD level	0.964 $(m/s^2)^2/Hz$
Acceleration	0.58g
Test duration per axis	5 h

Test directions	X-, Y- and Z-axis
Result	Test passed

Shocks

Specification	DIN EN 50155 (VDE 0115-200):2018-05
Pulse shape	Half-sine
Acceleration	5g
Shock duration	30 ms
Number of shocks per direction	3
Test directions	X-, Y- and Z-axis (pos. and neg.)
Result	Test passed

Ambient conditions

Ambient temperature (operation)	-60 °C ... 100 °C (max. operating temperature range including self-heating, see derating curve)
Ambient temperature (storage/transport)	-25 °C ... 60 °C (for a short time, not exceeding 24 h, -60 °C to +70 °C)
Ambient temperature (assembly)	-5 °C ... 70 °C
Ambient temperature (actuation)	-5 °C ... 70 °C
Permissible humidity (operation)	20 % ... 90 %
Permissible humidity (storage/transport)	30 % ... 70 %

Standards and regulations

Connection in acc. with standard	IEC 61984

Mounting

Mounting type	NS 35/7,5
	NS 35/15

Drawings

Dimensional drawing

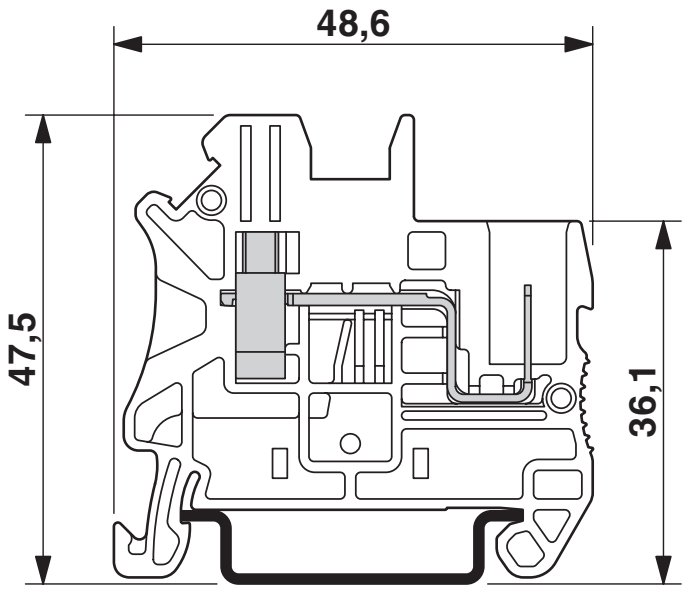

Diagram

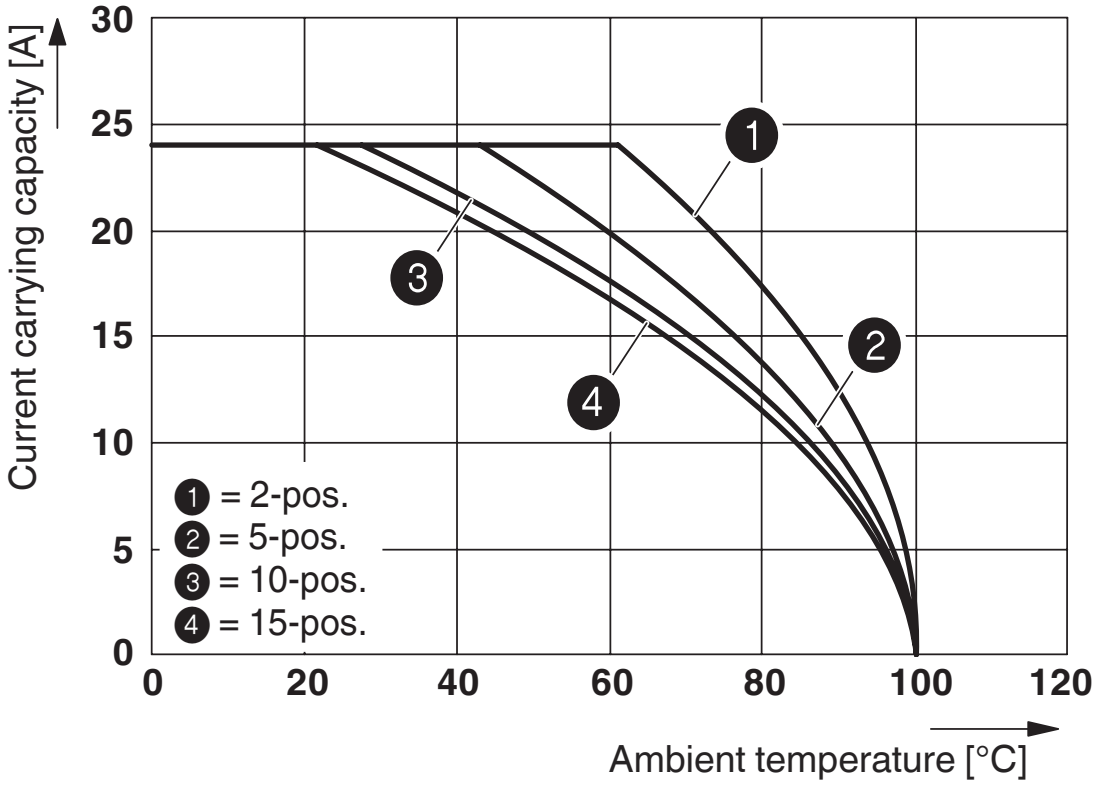

Diagram

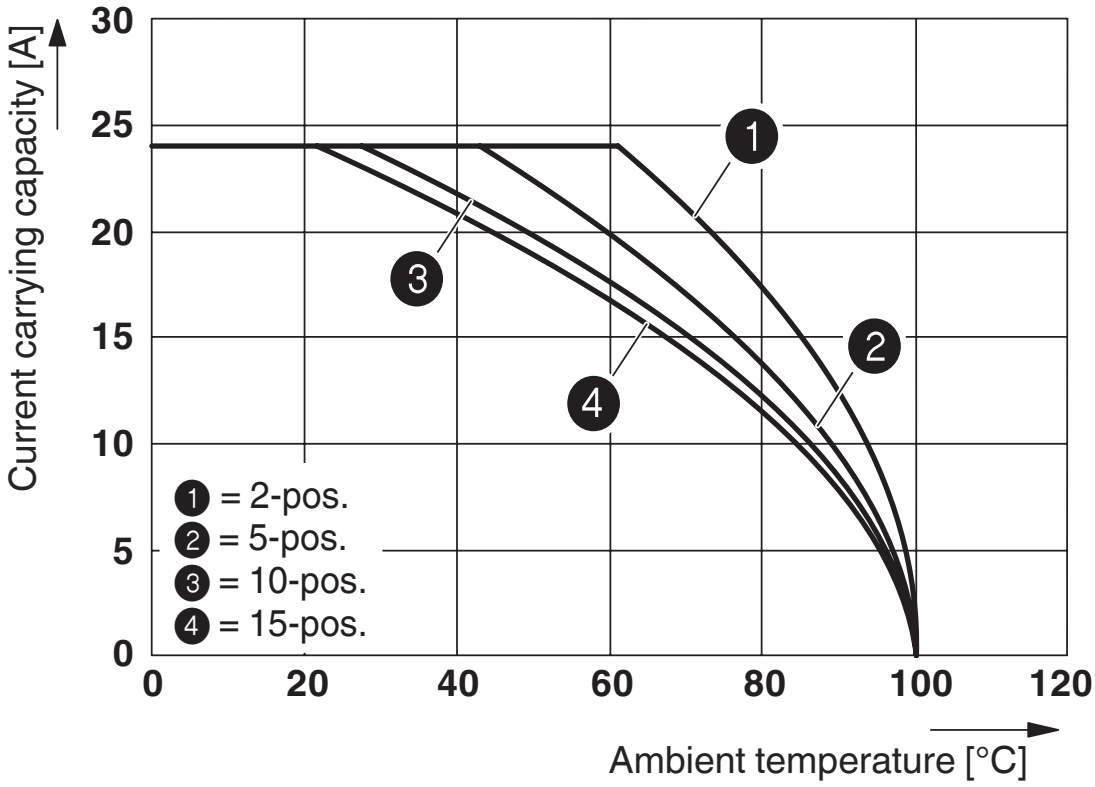

The figure shows the derating curve of the UT 2,5/1P... terminal block in connection with the UPBV 2,5 plug

Circuit diagram

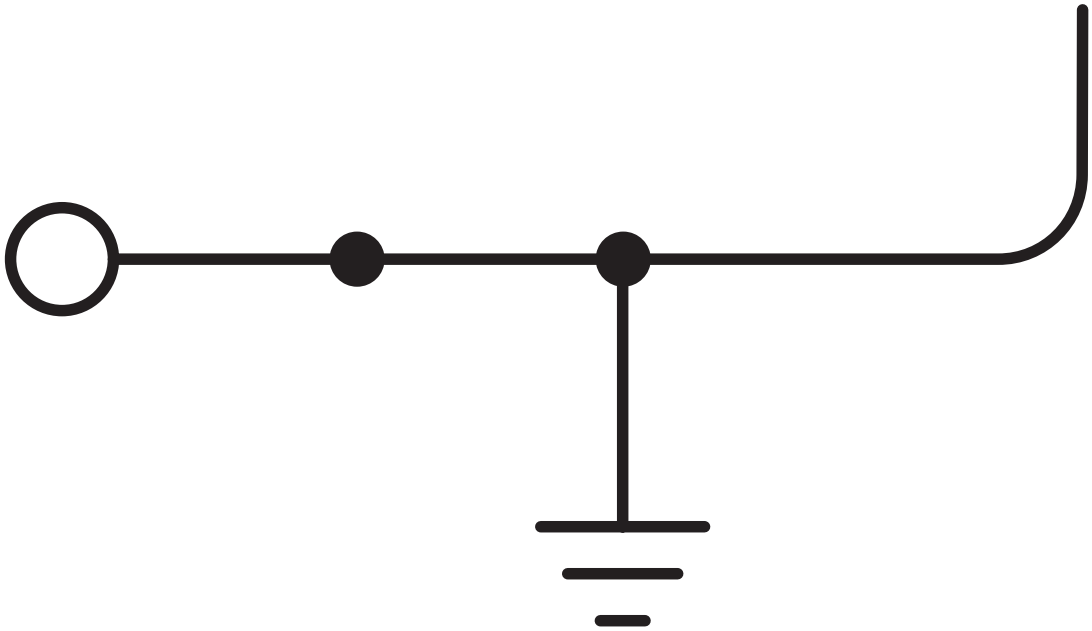

Approvals

To download certificates, visit the product detail page: https://www.phoenixcontact.com/us/products/3045033

EAC
Approval ID: KZ7500651131219505

CSA
Approval ID: 13631

	Nominal voltage U_N	Nominal current I_N	Cross section AWG	Cross section mm^2
B				
	-	-	26 - 12	-
C				
	-	-	26 - 12	-

cULus Recognized
Approval ID: E60425

	Nominal voltage U_N	Nominal current I_N	Cross section AWG	Cross section mm^2
B				
	-	-	26 - 12	-
Multi-conductor connection	-	-	26 - 16	-
C				
	-	-	26 - 12	-
Multi-conductor connection	-	-	26 - 16	-
D				
	-	-	26 - 12	-
Multi-conductor connection	-	-	26 - 16	-

Classifications

ECLASS

ECLASS-13.0	27250103
ECLASS-15.0	27250103

ETIM

ETIM 10.0	EC000901

UNSPSC

UNSPSC 21.0	39121400

Environmental product compliance

EU RoHS

Fulfills EU RoHS substance requirements	Yes
Exemption	6(c)

China RoHS

Environment friendly use period (EFUP)	EFUP-50
	An article-related China RoHS declaration table can be found in the download area for the respective article under "Manufacturer declaration". For all articles with EFUP-E, no China RoHS declaration table issued and required.

EU REACH SVHC

REACH candidate substance (CAS No.)	Lead(CAS: 7439-92-1)
SCIP	4b1f9343-f3d0-4a46-a9aa-edc818ddc264

EF3.1 Climate Change

CO2e kg	0.053 kg CO2e

Phoenix Contact 2026 © - all rights reserved
https://www.phoenixcontact.com

Phoenix Contact USA
586 Fulling Mill Road
Middletown, PA 17057, United States
(+717) 944-1300
info@phoenixcon.com