SP 2,5/ 1-M GNYE - Plug

3043064

https://www.phoenixcontact.com/us/products/3043064

Please be informed that the data shown in this PDF document is generated from our online catalog. Please find the complete data in the user documentation. Our general terms of use for downloads are valid.



The figure shows versions of the SP 2,5/1-..
. connector in various colors

Plug, nom. voltage: 500 V, nominal current: 24 A, number of positions: 1, connection method: Spring-cage connection, Rated cross section: 2.5 mm^2, cross section: 0.08 mm^2- 4 mm^2, color: green-yellow

Product description

Connector element center, left housing with engagement pin, right opened without cover

Your advantages

- Cable housing can be snapped on to the plugs, see figure below
- The plug with spring-cage connection is assembled directly on site by snapping together single-position plug elements
- The ST-COMBI plugs for self-assembly provide solutions that users can implement themselves

Commercial data

Item number	3043064
Packing unit	50 pc
Minimum order quantity	50 pc
Sales key	BE02
Product key	BE2144
GTIN	4017918894924
Weight per piece (including packing)	3.24 g
Weight per piece (excluding packing)	2.8 g
Customs tariff number	85366990
Country of origin	PL

Technical data

Notes

Notes on operation	COMBI connectors are connectors without switching power in accordance with IEC 61984 and can be connected or disconnected without load or voltage when used as intended

Product properties

Product type	Terminal plug
Number of positions	1
Pitch	5.2 mm

Insulation characteristics

Overvoltage category	III
Degree of pollution	3

Electrical properties

Rated surge voltage	6 kV

Connection data

Nominal cross section	2.5 mm²
Connection method	Spring-cage connection
Stripping length	8 mm ... 10 mm
Internal cylindrical gage	A3
Connection in acc. with standard	IEC 61984
Conductor cross-section rigid	0.08 mm² ... 4 mm²
Cross section AWG	28 ... 12 (converted acc. to IEC)
Conductor cross-section flexible	0.08 mm² ... 2.5 mm²
Conductor cross-section, flexible [AWG]	28 ... 14 (converted acc. to IEC)
Conductor cross-section flexible (ferrule without plastic sleeve)	0.14 mm² ... 2.5 mm²
Flexible conductor cross-section (ferrule with plastic sleeve)	0.14 mm² ... 2.5 mm²
2 conductors with the same cross section, flexible, with TWIN ferrule with plastic sleeve	0.5 mm²
Nominal cross section	2.5 mm²
Nominal current	24 A
Maximum load current	24 A (with 4 mm² conductor cross-section)
Nominal voltage	500 V

Dimensions

Width	5.2 mm
Height	15.8 mm
Depth	39 mm
Length	15.8 mm
Pitch	5.2 mm

Material specifications

Color	green-yellow
Flammability rating according to UL 94	V0
Insulating material group	I
Insulating material	PA
Static insulating material application in cold	-60 °C
Relative insulation material temperature index (Elec., UL 746 B)	130 °C
Fire protection for rail vehicles (DIN EN 45545-2) R22	HL 1 - HL 3
Fire protection for rail vehicles (DIN EN 45545-2) R23	HL 1 - HL 3
Fire protection for rail vehicles (DIN EN 45545-2) R24	HL 1 - HL 3
Fire protection for rail vehicles (DIN EN 45545-2) R26	HL 1 - HL 3
Surface flammability NFPA 130 (ASTM E 162)	passed
Specific optical density of smoke NFPA 130 (ASTM E 662)	passed
Smoke gas toxicity NFPA 130 (SMP 800C)	passed

Environmental and real-life conditions

Ambient conditions

Ambient temperature (operation)	-60 °C (max. operating temperature see derating curve)
Ambient temperature (storage/transport)	-25 °C ... 60 °C (for a short time, not exceeding 24 h, -60 °C to +70 °C)
Ambient temperature (assembly)	-5 °C ... 70 °C
Ambient temperature (actuation)	-5 °C ... 70 °C
Permissible humidity (operation)	20 % ... 90 %
Permissible humidity (storage/transport)	30 % ... 70 %

Standards and regulations

Connection in acc. with standard	IEC 61984

Drawings

Schematic diagram

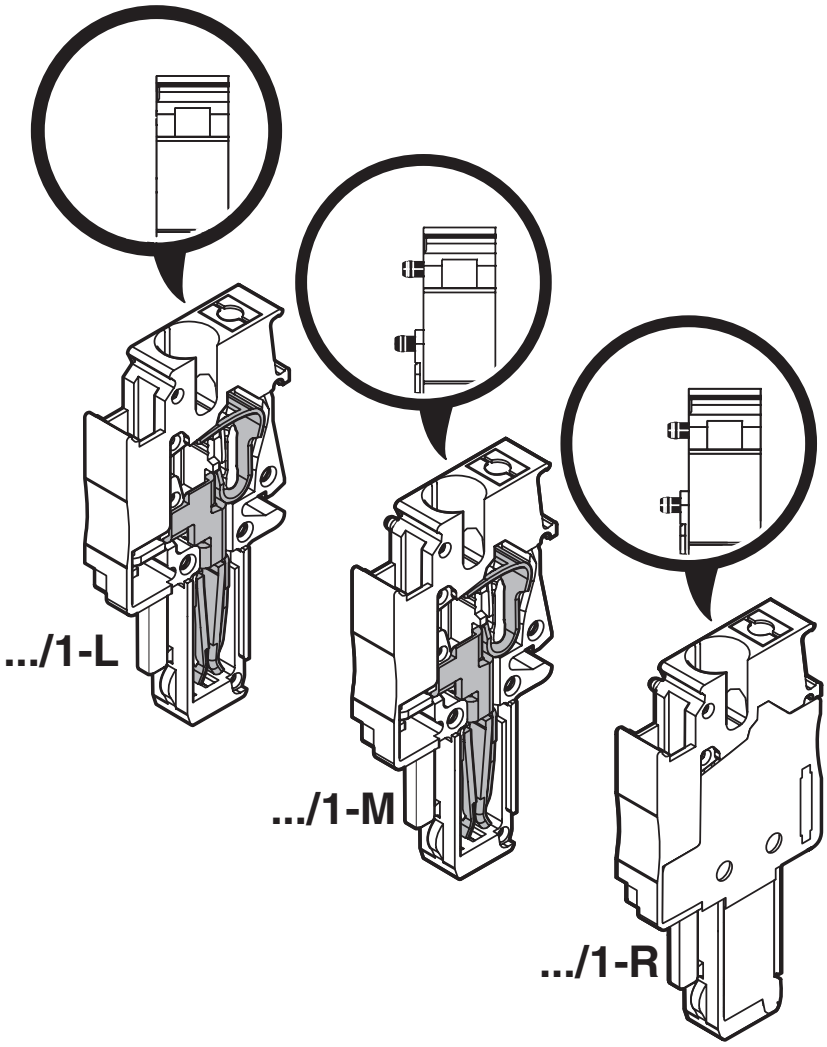

Diagram

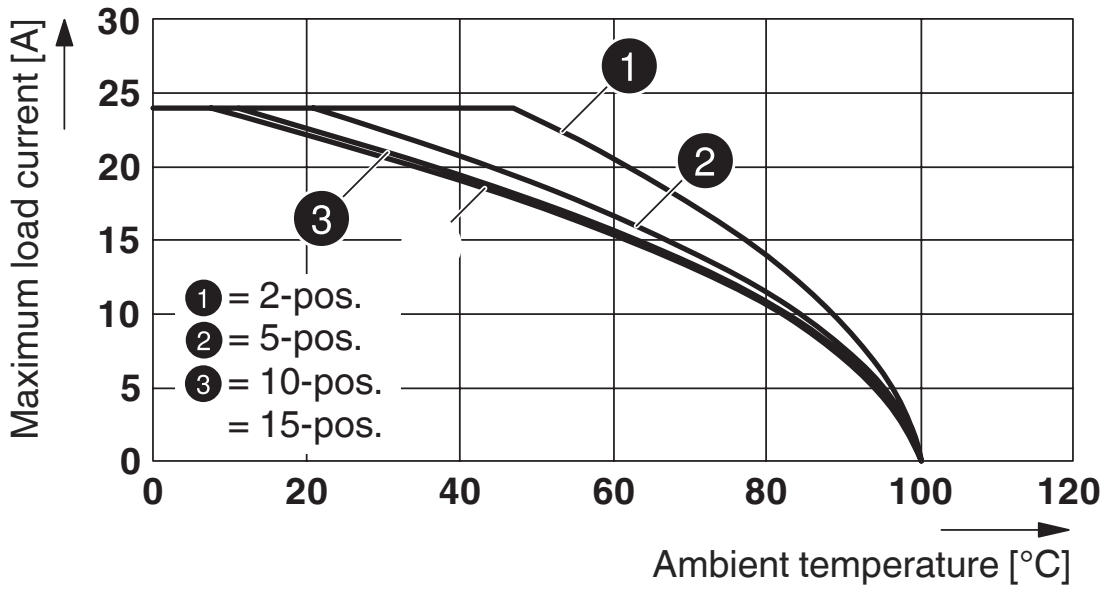

Derating curve for ST 2,5/ 1P, ST 2,5/ 2P, ST 2,5-TWIN/ 1P and for all plug versions SP... .

Diagram

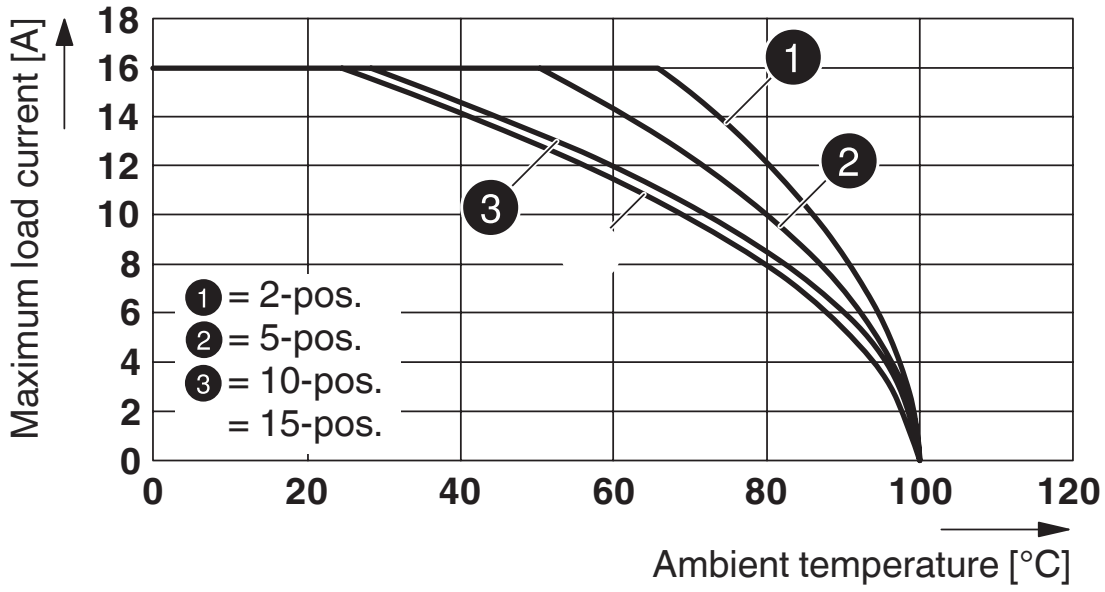

Derating curve for ST 2,5-TWIN-MT/1P, ST 2,5-TWIN-TG/1P and for all plug versions SP... .

Diagram

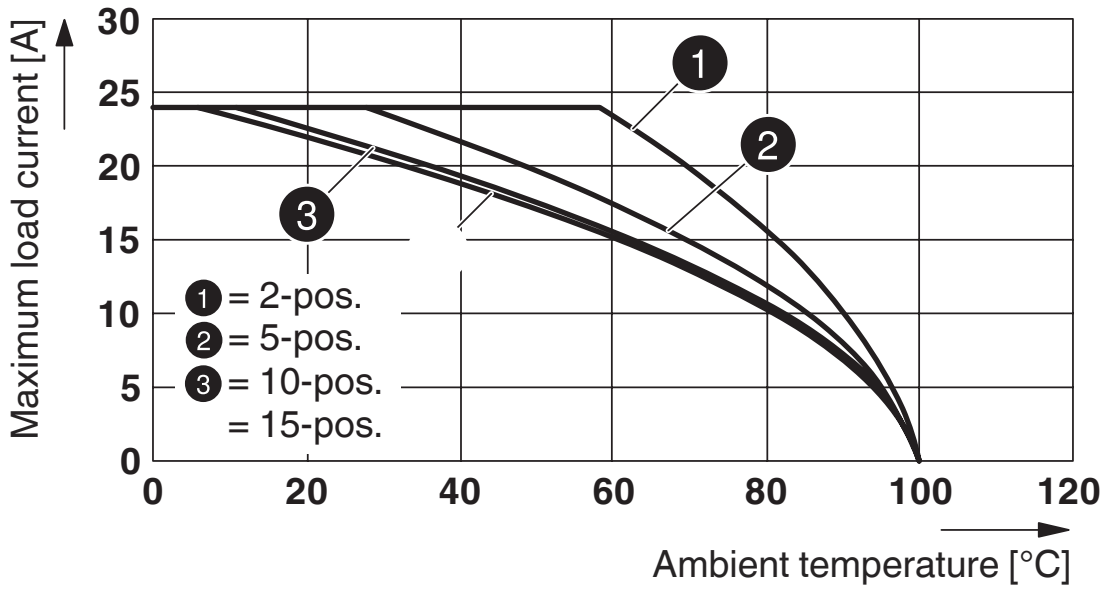

Derating curve for ST 2,5-QUATTRO/2P, ST 2,5-QUATTRO/4P and for all plug versions SP... .

Diagram

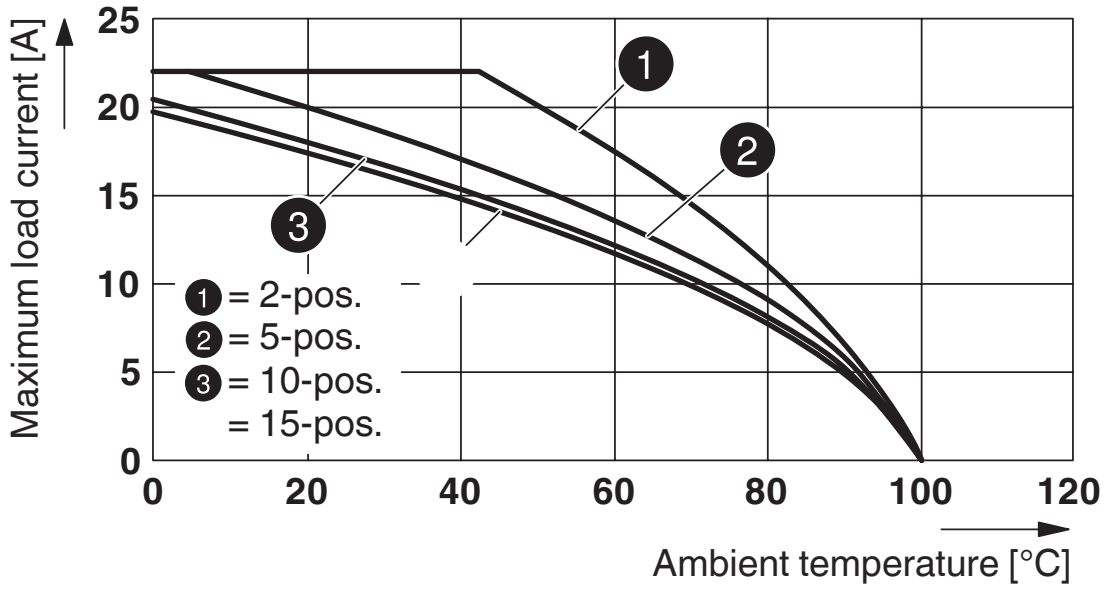

Derating curve for STTB 2,5/ 2P, STTB 2,5/ 2P-PV and for all plug versions SP... .

Diagram

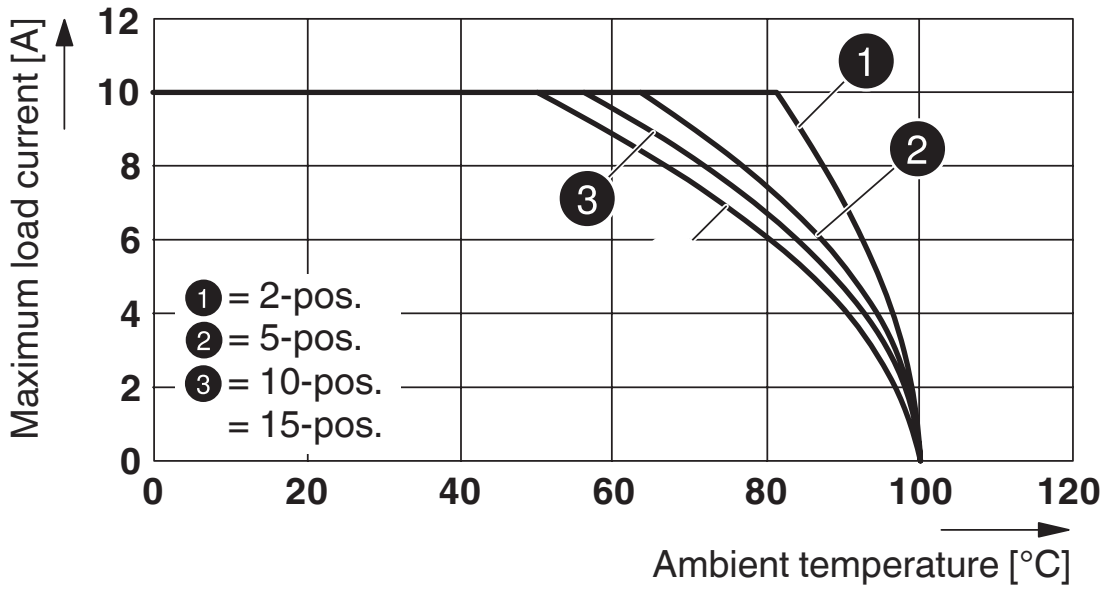

Derating curve for ST 2,5-4L/1P, ST 2,5-4L/2P and for all plug versions SP... .

Circuit diagram



Approvals

To download certificates, visit the product detail page: https://www.phoenixcontact.com/us/products/3043064

CSA
Approval ID: 13631

	Nominal voltage U_N	Nominal current I_N	Cross section AWG	Cross section mm^2
B				
	300 V	20 A	28 - 12	-
C				
	300 V	20 A	28 - 12	-
D				
	600 V	5 A	28 - 12	-

IECEE CB Scheme
Approval ID: DE1-62736/B1/B2

VDE Zeichengenehmigung
Approval ID: 40019518

	Nominal voltage U_N	Nominal current I_N	Cross section AWG	Cross section mm^2
keine				
Only flexible conductors	500 V	-	-	0.2 - 2.5
Only rigid conductors	500 V	-	-	0.2 - 4

cULus Recognized
Approval ID: E60425

	Nominal voltage U_N	Nominal current I_N	Cross section AWG	Cross section mm^2
B				
	300 V	20 A	26 - 12	-
C				
	300 V	20 A	26 - 12	-
D				
	600 V	5 A	26 - 12	-

DNV
Approval ID: TAE00001CS

EAC
Approval ID: KZ7500651131219505

Classifications

ECLASS

ECLASS-13.0	27250306
ECLASS-15.0	27250306

ETIM

ETIM 10.0	EC002021

UNSPSC

UNSPSC 21.0	39121400

Environmental product compliance

EU RoHS

Fulfills EU RoHS substance requirements	Yes, No exemptions

China RoHS

Environment friendly use period (EFUP)	EFUP-E
	No hazardous substances above the limits

EU REACH SVHC

REACH candidate substance (CAS No.)	No substance above 0.1 wt%

EF3.1 Climate Change

CO2e kg	0.027 kg CO2e

Phoenix Contact 2026 © - all rights reserved
https://www.phoenixcontact.com

Phoenix Contact USA
586 Fulling Mill Road
Middletown, PA 17057, United States
(+717) 944-1300
info@phoenixcon.com