P-CO - Component connector

3036796

https://www.phoenixcontact.com/us/products/3036796

Please be informed that the data shown in this PDF document is generated from our online catalog. Please find the complete data in the user documentation. Our general terms of use for downloads are valid.



Component connector, for installing components that can be individually selected, nom. voltage: 250 V, nominal current: 6 A, connection method: Plug-in connection, pitch: 5.2 mm, depth: 33.2 mm, width: 5.1 mm, height: 24.2 mm, number of positions: 1, color: gray, mounting type: Pluggable (slot)

Your advantages

- For assembly, the spring-cage connections are opened or closed inside the plug with just one turn of a standard screwdriver
- Can be used in all disconnect terminal blocks of the range ...-TG with 5.2 mm width or wider, from the PT, ST, QTC and UT series
- The P-CO patented component plug can accommodate components quickly and reliably using spring-cage contacts
- A coding recess ensures protection against polarity reversal

Commercial data

Item number	3036796
Packing unit	10 pc
Minimum order quantity	10 pc
Sales key	BE29
Product key	BE2Z3X
GTIN	4017918929145
Weight per piece (including packing)	3.65 g
Weight per piece (excluding packing)	3.65 g
Customs tariff number	85366990
Country of origin	PL

Technical data

Notes

Notes on operation	Components with a wire diameter from 0.5 mm up to 0.8 mm can be used. Component diameters up to 4.5 mm.

Product properties

Product type	Component plug terminal block
Number of positions	1
Pitch	5.2 mm
Potentials	1

Insulation characteristics

Pollution degree	3

Connection data

Connection method	Plug-in connection
Conductor cross-section rigid	0.5 mm² ... 0.8 mm²
Conductor cross-section flexible	0.5 mm² ... 0.8 mm²
Nominal cross section	0.5 mm²
Nominal current	6 A
Maximum load current	6 A (with 0.5 mm² conductor cross-section)
Nominal voltage	250 V (the voltage is determined by the component used)

Dimensions

Dimensional drawing	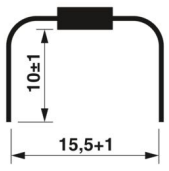
Width	5.1 mm
Height	24.2 mm
Depth	33.2 mm
Pitch	5.2 mm

Material specifications

Color	gray (RAL 7042)
Flammability rating according to UL 94	V0
Insulating material	PA
Static insulating material application in cold	-60 °C
Relative insulation material temperature index (Elec., UL 746 B)	130 °C
Fire protection for rail vehicles (DIN EN 45545-2) R22	HL 1 - HL 3
Fire protection for rail vehicles (DIN EN 45545-2) R23	HL 1 - HL 3

Fire protection for rail vehicles (DIN EN 45545-2) R24	HL 1 - HL 3
Fire protection for rail vehicles (DIN EN 45545-2) R26	HL 1 - HL 3
Surface flammability NFPA 130 (ASTM E 162)	passed
Specific optical density of smoke NFPA 130 (ASTM E 662)	passed
Smoke gas toxicity NFPA 130 (SMP 800C)	passed

Environmental and real-life conditions

Ambient conditions

Ambient temperature (operation)	-60 °C ... 110 °C (Operating temperature range incl. self-heating; for max. short-term operating temperature, see RTI Elec.)
Ambient temperature (storage/transport)	-25 °C ... 60 °C (for a short time, not exceeding 24 h, -60 °C to +70 °C)
Ambient temperature (assembly)	-5 °C ... 70 °C
Ambient temperature (actuation)	-5 °C ... 70 °C
Permissible humidity (operation)	20 % ... 90 %
Permissible humidity (storage/transport)	30 % ... 70 %

Mounting

Mounting type	Pluggable (slot)

Drawings

Dimensional drawing

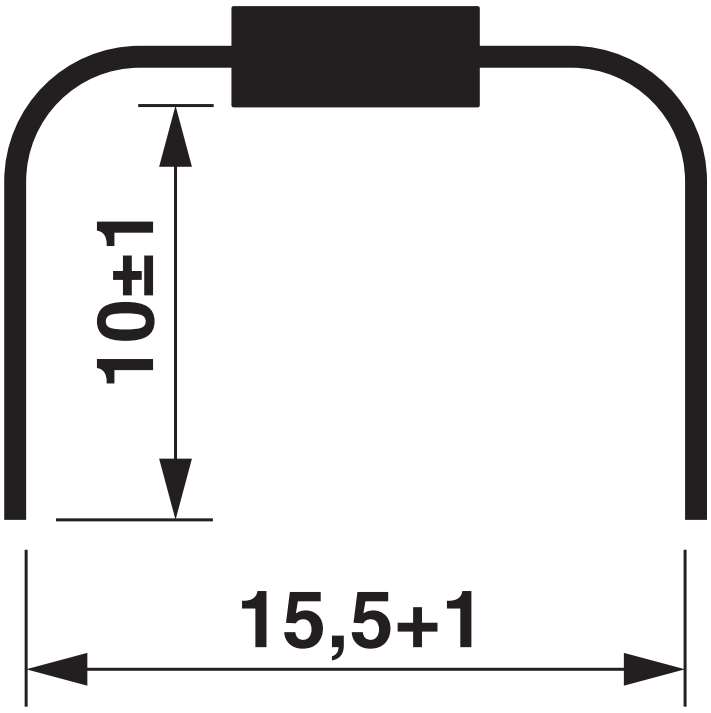

Dimensional drawing

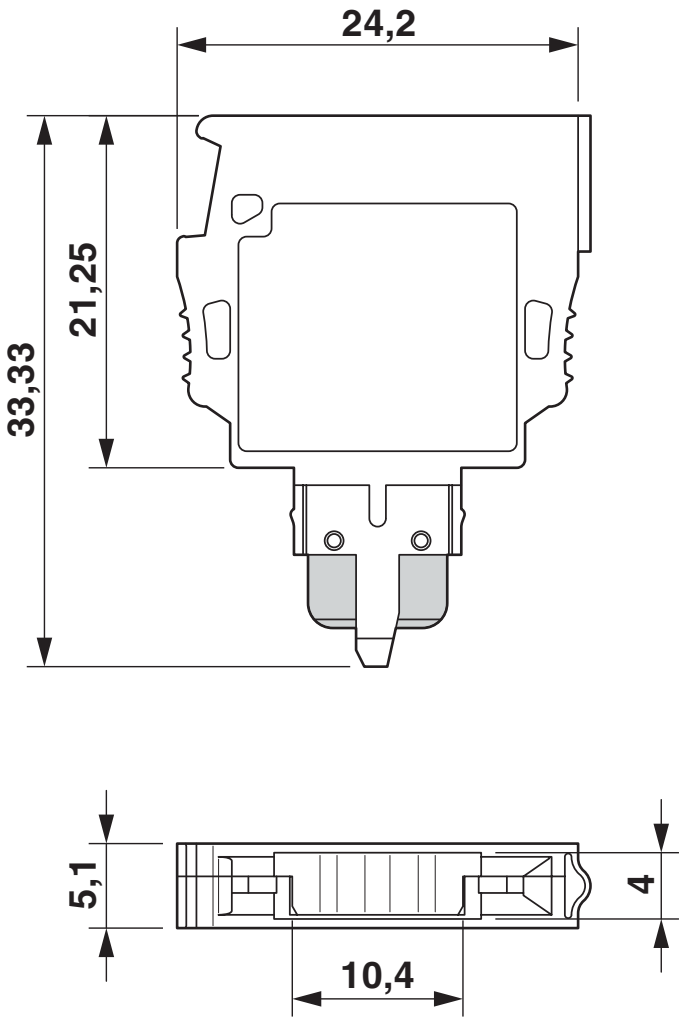

Approvals

To download certificates, visit the product detail page: https://www.phoenixcontact.com/us/products/3036796

CSA
Approval ID: 158887

DNV
Approval ID: TAE000010T

Classifications

ECLASS

ECLASS-13.0	27250305
ECLASS-15.0	27250305

ETIM

ETIM 10.0	EC002018

UNSPSC

UNSPSC 21.0	39121600

Environmental product compliance

EU RoHS

Fulfills EU RoHS substance requirements	Yes, No exemptions

China RoHS

Environment friendly use period (EFUP)	EFUP-E
	No hazardous substances above the limits

EU REACH SVHC

REACH candidate substance (CAS No.)	No substance above 0.1 wt%

EF3.1 Climate Change

CO2e kg	0.023 kg CO2e

Phoenix Contact 2026 © - all rights reserved
https://www.phoenixcontact.com

Phoenix Contact USA
586 Fulling Mill Road
Middletown, PA 17057, United States
(+717) 944-1300
info@phoenixcon.com