STME 6 - Test disconnect terminal block

3035700

https://www.phoenixcontact.com/us/products/3035700

Please be informed that the data shown in this PDF document is generated from our online catalog. Please find the complete data in the user documentation. Our general terms of use for downloads are valid.



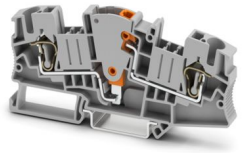

Test disconnect terminal block, nom. voltage: 500 V, nominal current: 30 A, number of connections: 2, connection method: Spring-cage connection, Rated cross section: 6 mm^2, cross section: 0.2 mm^2 - 10 mm^2, mounting type: NS 35/7,5, NS 35/15, color: gray

Your advantages

- Feed-through terminal blocks of the same shape are available
- Clear selection thanks to printed switching symbols
- Easy operation
- Six function shafts
- Compact design
- Flexible and comprehensive accessories
- Reliably snapped into the end positions

Commercial data

Item number	3035700
Packing unit	50 pc
Minimum order quantity	50 pc
Sales key	BE02
Product key	BE2133
GTIN	4046356281416
Weight per piece (including packing)	24.468 g
Weight per piece (excluding packing)	24.468 g
Customs tariff number	85369010
Country of origin	PL

Technical data

Notes

General

Note	The max. load current must not be exceeded by the total current of all connected conductors.

Product properties

Product type	Test disconnect terminal block
Number of connections	2
Number of rows	1
Potentials	1

Insulation characteristics

Overvoltage category	III
Degree of pollution	3

Electrical properties

Rated surge voltage	6 kV
Maximum power dissipation for nominal condition	1.31 W

Connection data

Number of connections per level	2
Nominal cross section	6 mm²
Connection method	Spring-cage connection
Stripping length	12 mm
Internal cylindrical gage	A4
Connection in acc. with standard	IEC 60947-7-1
Conductor cross-section rigid	0.2 mm² ... 10 mm²
Cross section AWG	24 ... 8 (converted acc. to IEC)
Conductor cross-section flexible	0.2 mm² ... 6 mm²
Conductor cross-section, flexible [AWG]	24 ... 10 (converted acc. to IEC)
Conductor cross-section flexible (ferrule without plastic sleeve)	0.25 mm² ... 6 mm²
Flexible conductor cross-section (ferrule with plastic sleeve)	0.25 mm² ... 6 mm²
2 conductors with the same cross section, flexible, with TWIN ferrule with plastic sleeve	0.5 mm² ... 1.5 mm²
Nominal cross section	6 mm²
Nominal current	30 A
Maximum load current	30 A (with 10 mm² conductor cross-section)
Nominal voltage	500 V

Dimensions

Width	8.2 mm
Height	100.8 mm

Depth on NS 35/7,5	49.6 mm
Depth on NS 35/15	57.1 mm

Material specifications

Color	gray (RAL 7042)
Flammability rating according to UL 94	V0
Insulating material group	I
Insulating material	PA
Static insulating material application in cold	-60 °C
Temperature index of insulation material (DIN EN 60216-1 (VDE 0304-21))	130 °C
Relative insulation material temperature index (Elec., UL 746 B)	130 °C
Fire protection for rail vehicles (DIN EN 45545-2) R22	HL 1 - HL 3
Fire protection for rail vehicles (DIN EN 45545-2) R23	HL 1 - HL 3
Fire protection for rail vehicles (DIN EN 45545-2) R24	HL 1 - HL 3
Fire protection for rail vehicles (DIN EN 45545-2) R26	HL 1 - HL 3
Calorimetric heat release NFPA 130 (ASTM E 1354)	28 MJ/kg
Surface flammability NFPA 130 (ASTM E 162)	passed
Specific optical density of smoke NFPA 130 (ASTM E 662)	passed
Smoke gas toxicity NFPA 130 (SMP 800C)	passed

Electrical tests

Surge voltage test

Test voltage setpoint	7.3 kV
Result	Test passed

Temperature-rise test

Requirement temperature-rise test	Increase in temperature ≤ 45 K
Result	Test passed
Short-time withstand current 6 mm²	0.72 kA
Result	Test passed

Power-frequency withstand voltage

Test voltage setpoint	1.89 kV
Result	Test passed

Mechanical properties

Mechanical data

Open side panel	Yes

Mechanical tests

Mechanical strength

Result	Test passed

Attachment on the carrier

DIN rail/fixing support	NS 35
Test force setpoint	5 N
Result	Test passed

Test for conductor damage and slackening

Rotation speed	10 rpm
Revolutions	135
Conductor cross-section/weight	0.2 mm² / 0.2 kg
	6 mm² / 1.4 kg
	10 mm² / 2 kg
Result	Test passed

Environmental and real-life conditions

Aging

Temperature cycles	192
Result	Test passed

Needle-flame test

Time of exposure	30 s
Result	Test passed

Oscillation/broadband noise

Specification	DIN EN 50155 (VDE 0115-200):2008-03
Spectrum	Long life test category 2, bogie-mounted
Frequency	f_1 = 5 Hz to f_2 = 250 Hz
ASD level	6.12 (m/s²)²/Hz
Acceleration	3.12g
Test duration per axis	5 h
Test directions	X-, Y- and Z-axis
Result	Test passed

Shocks

Specification	DIN EN 50155 (VDE 0115-200):2008-03
Pulse shape	Half-sine
Acceleration	30g
Shock duration	18 ms
Number of shocks per direction	3
Test directions	X-, Y- and Z-axis (pos. and neg.)
Result	Test passed

Ambient conditions

Ambient temperature (operation)	-60 °C ... 110 °C (Operating temperature range incl. self-heating; for max. short-term operating temperature, see RTI Elec.)
Ambient temperature (storage/transport)	-25 °C ... 60 °C (for a short time, not exceeding 24 h, -60 °C to +70 °C)
Ambient temperature (assembly)	-5 °C ... 70 °C

Ambient temperature (actuation)	-5 °C ... 70 °C
Permissible humidity (operation)	20 % ... 90 %
Permissible humidity (storage/transport)	30 % ... 70 %

Standards and regulations

Connection in acc. with standard	IEC 60947-7-1

Mounting

Mounting type	NS 35/7,5
	NS 35/15

Drawings

Connection diagram

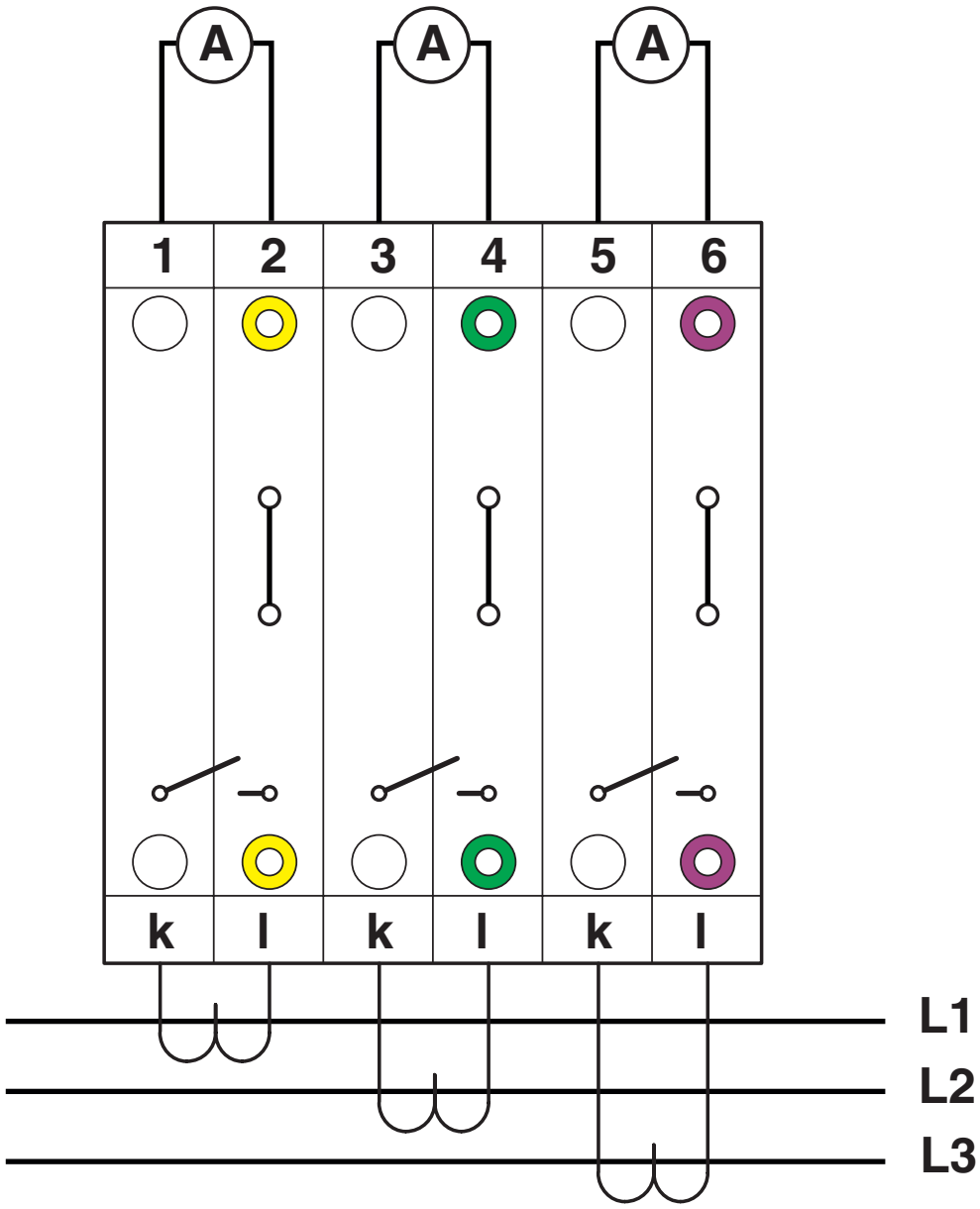

Connection diagram

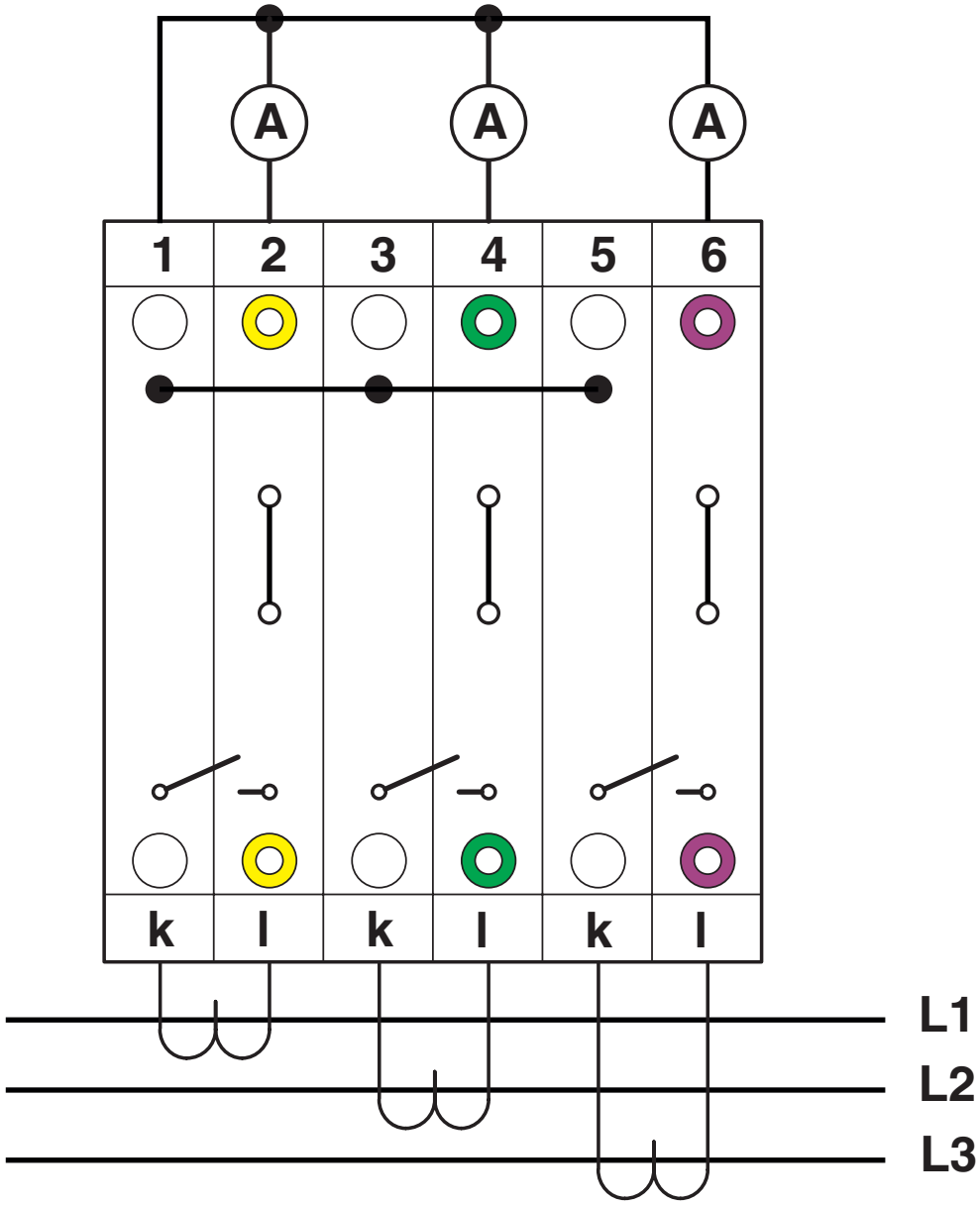

Connection diagram

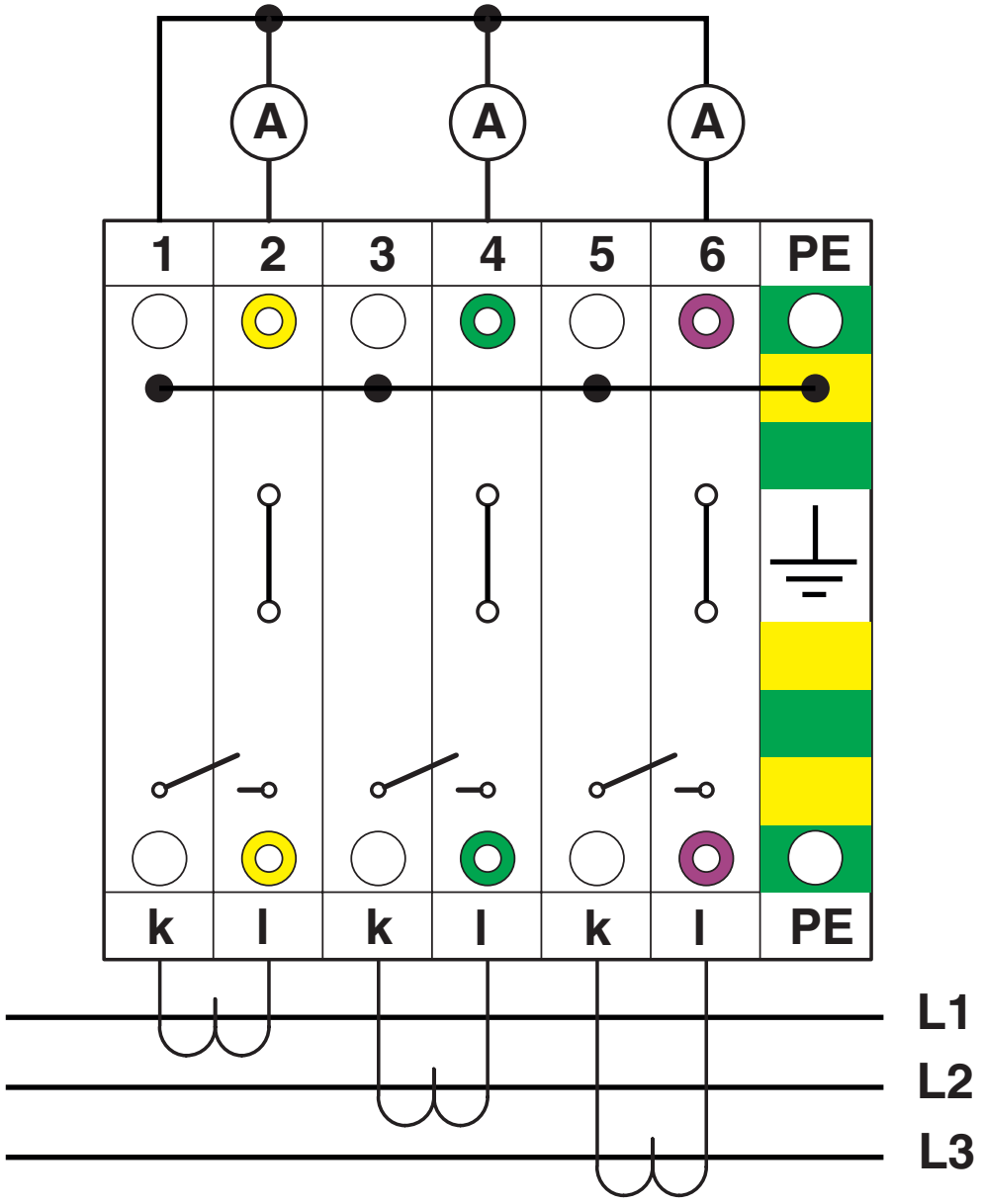

with PE terminals having the same contours

Connection diagram

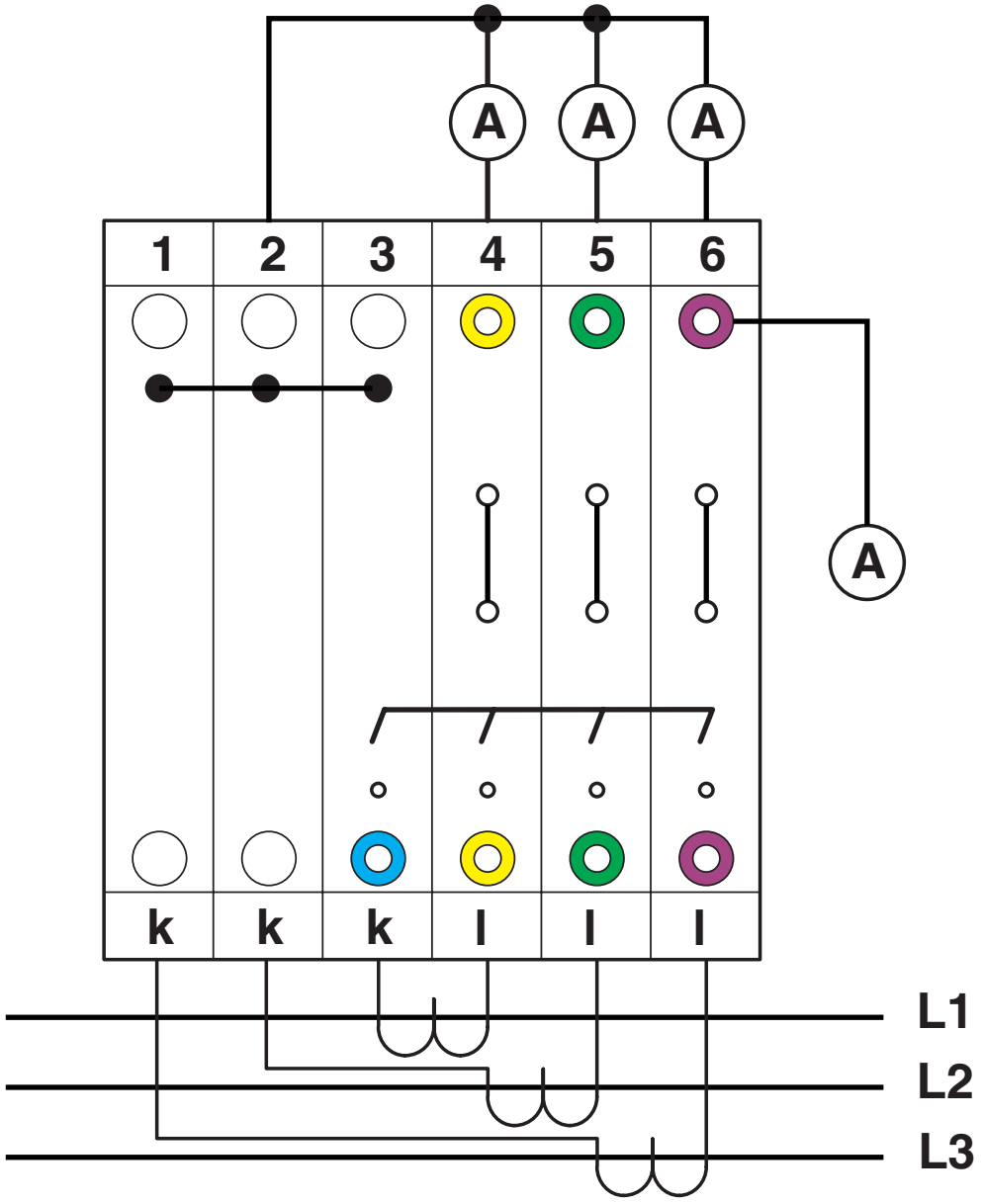

phase to phase

Schematic diagram

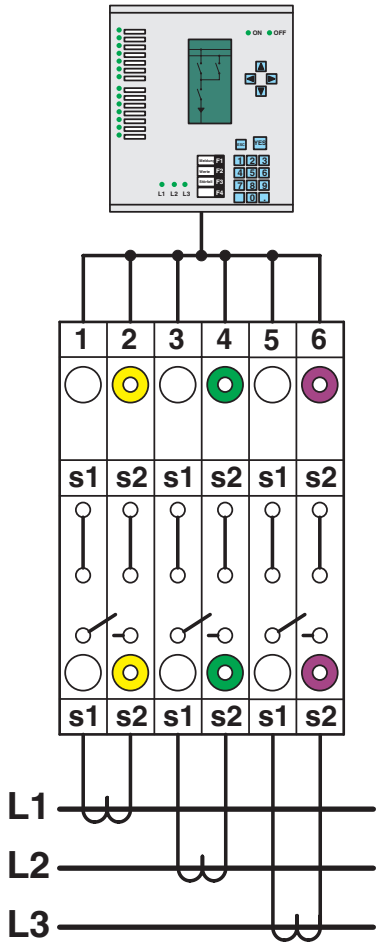

Simple three-phase current transformer set

Schematic diagram

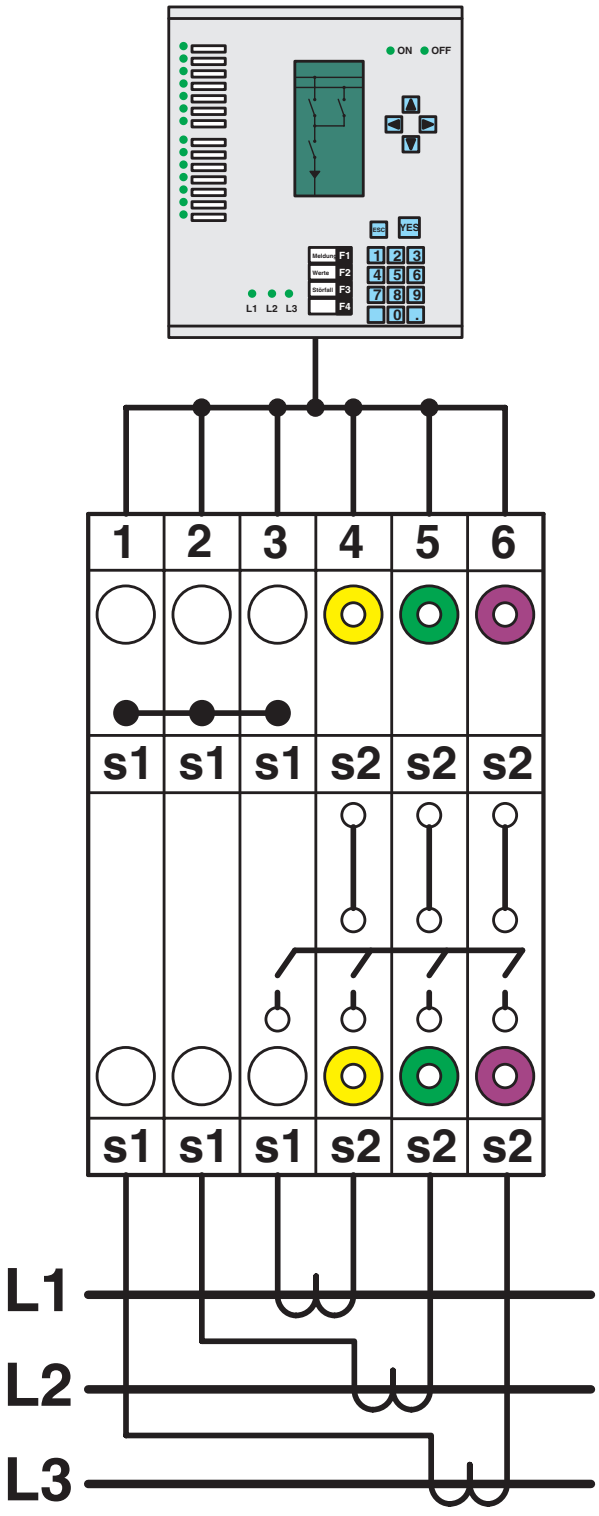

Interlinked three-phase current transformer set

Schematic diagram

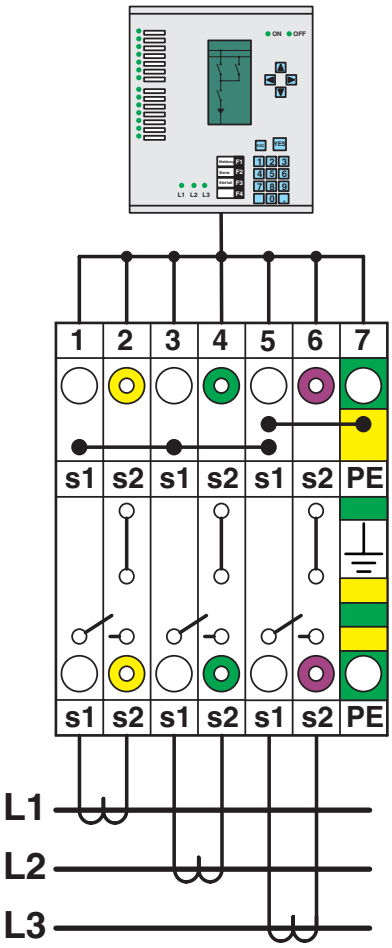

Interlinked three-phase current transformer set with grounded star point

Circuit diagram

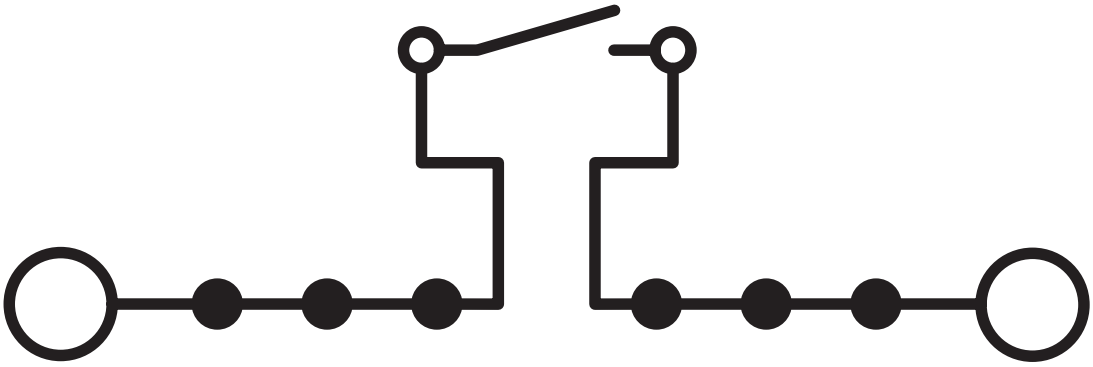

Circuit diagram

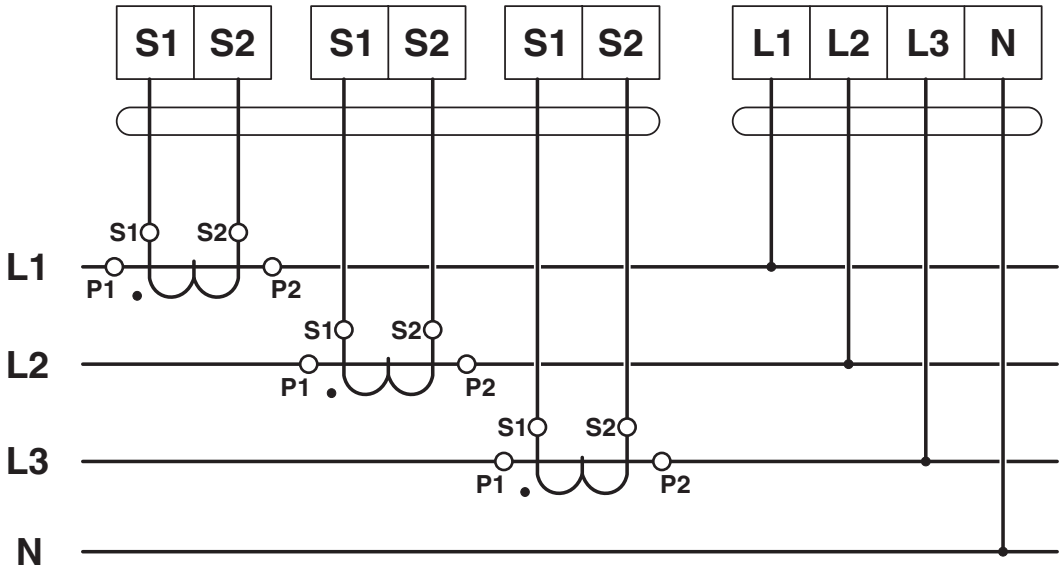

Circuit diagram

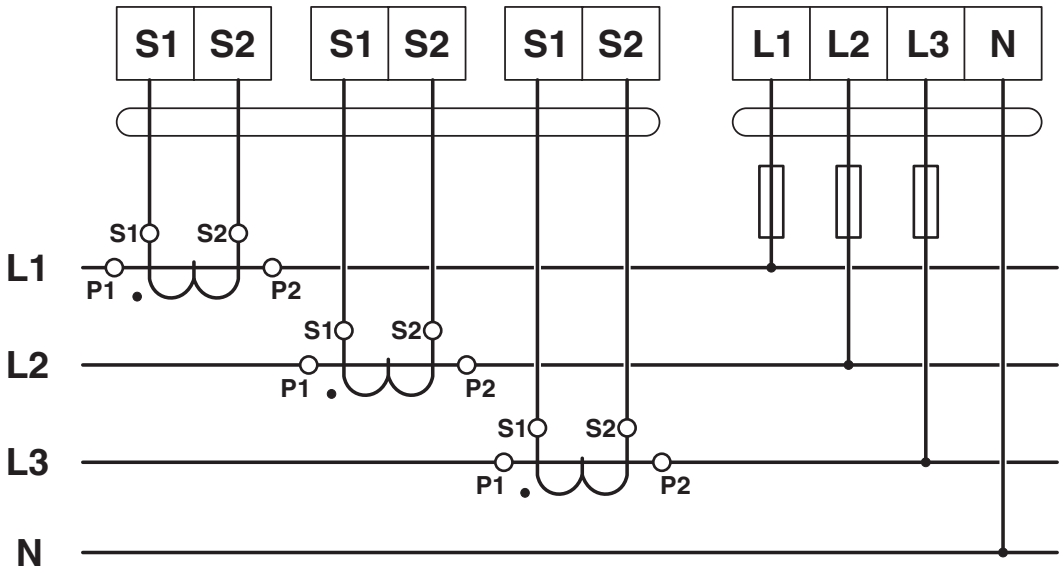

Approvals

To download certificates, visit the product detail page: https://www.phoenixcontact.com/us/products/3035700

CSA
Approval ID: 13631

	Nominal voltage U_N	Nominal current I_N	Cross section AWG	Cross section mm^2
B				
	300 V	30 A	24 - 8	-
C				
	300 V	30 A	24 - 8	-

EAC
Approval ID: RU C-DE.BL08.B.00644

cULus Recognized
Approval ID: E60425

	Nominal voltage U_N	Nominal current I_N	Cross section AWG	Cross section mm^2
B				
	600 V	30 A	24 - 8	-
C				
	600 V	30 A	24 - 8	-
F				
	500 V	30 A	24 - 8	-

EAC
Approval ID: KZ7500651131219505

Classifications

ECLASS

ECLASS-13.0	27250109
ECLASS-15.0	27250109

ETIM

ETIM 10.0	EC000902

UNSPSC

UNSPSC 21.0	39121400

Environmental product compliance

EU RoHS

Fulfills EU RoHS substance requirements	Yes, No exemptions

China RoHS

Environment friendly use period (EFUP)	EFUP-E
	No hazardous substances above the limits

EU REACH SVHC

REACH candidate substance (CAS No.)	No substance above 0.1 wt%

EF3.1 Climate Change

CO2e kg	0.124 kg CO2e

Phoenix Contact 2026 © - all rights reserved
https://www.phoenixcontact.com

Phoenix Contact USA
586 Fulling Mill Road
Middletown, PA 17057, United States
(+717) 944-1300
info@phoenixcon.com