# PTME 6 HV - Test disconnect terminal block

3035696

https://www.phoenixcontact.com/us/products/3035696

Please be informed that the data shown in this PDF document is generated from our online catalog. Please find the complete data in the user documentation. Our general terms of use for downloads are valid.






Test disconnect terminal block, nom. voltage: 1000 V, nominal current: 30 A, number of connections: 2, connection method: Push-in connection, Rated cross section: 6 mm$^2$, 1 level, cross section: 0.5 mm$^2$ - 10 mm$^2$, mounting type: NS 35/15, NS 35/7,5, color: gray

## Commercial data

| | |
|---|---|
| Item number | 3035696 |
| Packing unit | 50 pc |
| Minimum order quantity | 50 pc |
| Sales key | BE22 |
| Product key | BE2233 |
| GTIN | 4046356644846 |
| Weight per piece (including packing) | 27.09 g |
| Weight per piece (excluding packing) | 26.86 g |
| Customs tariff number | 85369010 |
| Country of origin | PL |

## Technical data

### Product properties

| | |
|---|---|
| Product type | Test disconnect terminal block |
| Number of connections | 2 |
| Number of rows | 1 |
| Potentials | 1 |

Insulation characteristics

| | |
|---|---|
| Overvoltage category | III |
| Degree of pollution | 3 |

### Electrical properties

| | |
|---|---|
| Rated surge voltage | 8 kV |
| Maximum power dissipation for nominal condition | 1.31 W |

### Connection data

| | |
|---|---|
| Number of connections per level | 2 |
| Nominal cross section | 6 mm² |

1 level

| | |
|---|---|
| Connection method | Push-in connection |
| Stripping length | 12 mm |
| Internal cylindrical gage | A5 |
| Connection in acc. with standard | IEC 60947-7-1 |
| Conductor cross-section rigid | 0.5 mm² ... 10 mm² |
| Cross section AWG | 20 ... 8 (converted acc. to IEC) |
| Conductor cross-section flexible | 0.5 mm² ... 6 mm² |
| Conductor cross-section, flexible [AWG] | 20 ... 10 (converted acc. to IEC) |
| Conductor cross-section flexible (ferrule without plastic sleeve) | 0.5 mm² ... 6 mm² |
| Flexible conductor cross-section (ferrule with plastic sleeve) | 0.5 mm² ... 6 mm² |
| Conductor cross-section flexible (2 conductors with the same cross-section, with TWIN ferrule and plastic sleeve) | 0.5 mm² ... 1.5 mm² |
| 2 conductors with the same cross section, flexible, with TWIN ferrule with plastic sleeve | 0.5 mm² ... 1.5 mm² |
| Nominal cross section | 6 mm² |
| Nominal current | 30 A |
| Maximum load current | 30 A (with 10 mm² conductor cross-section) |
| Nominal voltage | 1000 V |

1 level Connection cross sections directly pluggable

| | |
|---|---|
| Conductor cross-section rigid | 1 mm² ... 10 mm² |
| Conductor cross-section flexible (ferrule without plastic sleeve) | 1 mm² ... 6 mm² |
| Flexible conductor cross-section (ferrule with plastic sleeve) | 1 mm² ... 6 mm² |

## Dimensions

| | |
|---|---|
| Width | 8.2 mm |
| End cover width | 2.2 mm |
| Height | 100.8 mm |
| Depth | 49 mm |
| Depth on NS 35/7,5 | 49.6 mm |
| Depth on NS 35/15 | 57.1 mm |

## Material specifications

| | |
|---|---|
| Color | gray (RAL 7042) |
| Flammability rating according to UL 94 | V0 |
| Insulating material group | I |
| Insulating material | PA |
| Static insulating material application in cold | -60 °C |
| Temperature index of insulation material (DIN EN 60216-1 (VDE 0304-21)) | 125 °C |
| Relative insulation material temperature index (Elec., UL 746 B) | 130 °C |
| Fire protection for rail vehicles (DIN EN 45545-2) R22 | HL 1 - HL 3 |
| Fire protection for rail vehicles (DIN EN 45545-2) R23 | HL 1 - HL 3 |
| Fire protection for rail vehicles (DIN EN 45545-2) R24 | HL 1 - HL 3 |
| Fire protection for rail vehicles (DIN EN 45545-2) R26 | HL 1 - HL 3 |
| Calorimetric heat release NFPA 130 (ASTM E 1354) | 27,5 MJ/kg |
| Surface flammability NFPA 130 (ASTM E 162) | passed |
| Specific optical density of smoke NFPA 130 (ASTM E 662) | passed |
| Smoke gas toxicity NFPA 130 (SMP 800C) | passed |

## Electrical tests

### Surge voltage test

| | |
|---|---|
| Test voltage setpoint | 9.8 kV |
| Result | Test passed |

### Temperature-rise test

| | |
|---|---|
| Requirement temperature-rise test | Increase in temperature ≤ 45 K |
| Result | Test passed |
| Short-time withstand current 4 mm² | 0.48 kA |
| Result | Test passed |

### Power-frequency withstand voltage

| | |
|---|---|
| Test voltage setpoint | 2.2 kV |
| Result | Test passed |

## Mechanical properties

### Mechanical data

| | |
|---|---|
| Open side panel | Yes |

## Mechanical tests

Mechanical strength

| | |
|---|---|
| Result | Test passed |

Attachment on the carrier

| | |
|---|---|
| DIN rail/fixing support | NS 35 |
| Test force setpoint | 5 N |
| Result | Test passed |

Test for conductor damage and slackening

| | |
|---|---|
| Rotation speed | 10 (+/- 2) rpm |
| Revolutions | 135 |
| Conductor cross-section/weight | 0.5 mm² / 0.3 kg |
| | 6 mm² / 1.4 kg |
| | 10 mm² / 2 kg |
| Result | Test passed |

## Environmental and real-life conditions

Needle-flame test

| | |
|---|---|
| Time of exposure | 30 s |
| Result | Test passed |

Oscillation/broadband noise

| | |
|---|---|
| Specification | DIN EN 50155 (VDE 0115-200):2018-05 |
| Spectrum | Long life test category 2, bogie-mounted |
| Frequency | $f_1$ = 5 Hz to $f_2$ = 250 Hz |
| ASD level | 6.12 (m/s²)²/Hz |
| Acceleration | 3.12g |
| Test duration per axis | 5 h |
| Test directions | X-, Y- and Z-axis |

Shocks

| | |
|---|---|
| Specification | DIN EN 50155 (VDE 0115-200):2008-03 |
| Pulse shape | Semi-sinusoidal |
| Acceleration | 30g |
| Shock duration | 18 ms |
| Number of shocks per direction | 3 |
| Test directions | X-, Y- and Z-axis (pos. and neg.) |

Ambient conditions

| | |
|---|---|
| Ambient temperature (operation) | -60 °C ... 110 °C (Operating temperature range incl. self-heating; for max. short-term operating temperature, see RTI Elec.) |
| Ambient temperature (storage/transport) | -25 °C ... 60 °C (for a short time, not exceeding 24 h, -60 °C to +70 °C) |
| Ambient temperature (assembly) | -5 °C ... 70 °C |

| | |
|---|---|
| Ambient temperature (actuation) | -5 °C ... 70 °C |
| Permissible humidity (operation) | 20 % ... 90 % |
| Permissible humidity (storage/transport) | 30 % ... 70 % |

## Standards and regulations

| | |
|---|---|
| Connection in acc. with standard | IEC 60947-7-1 |

## Mounting

| | |
|---|---|
| Mounting type | NS 35/15 |
| | NS 35/7,5 |

## Drawings

Circuit diagram

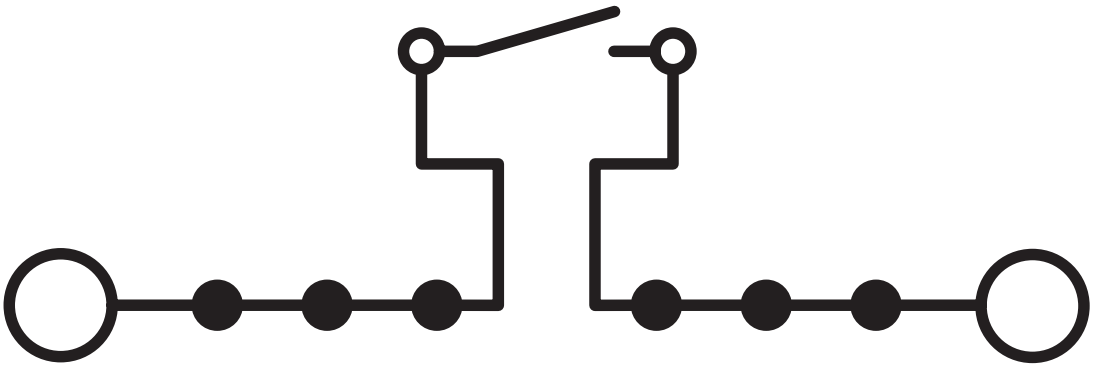

Circuit diagram

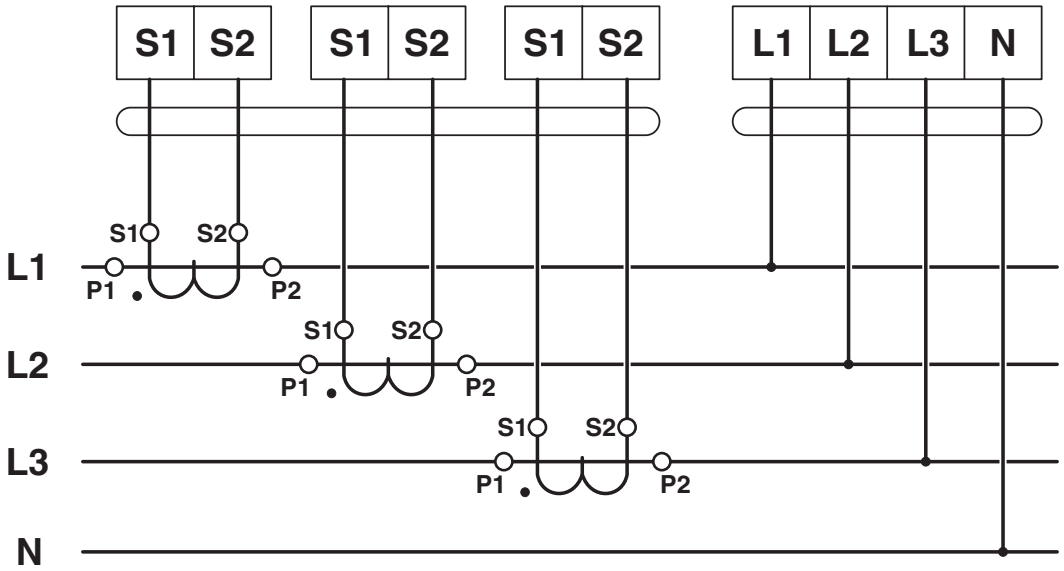

Circuit diagram

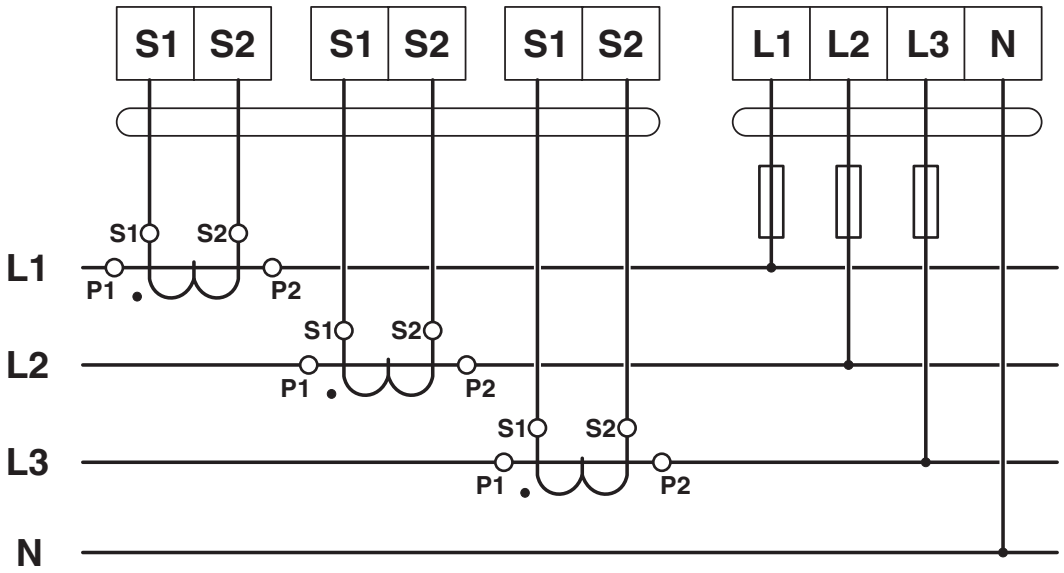

## Approvals

To download certificates, visit the product detail page: https://www.phoenixcontact.com/us/products/3035696

**IECEE CB Scheme**
Approval ID: NL-37536

**EAC**
Approval ID: RU C-DE.BL08.B.00644

**KEMA-KEUR**
Approval ID: 2183172.01

| | Nominal voltage $U_N$ | Nominal current $I_N$ | Cross section AWG | Cross section $mm^2$ |
|---|---|---|---|---|
| keine | | | | |
| Only flexible conductors | 1000 V | 30 A | - | 0.5 - 6 |
| Only rigid conductors | 1000 V | 30 A | - | 0.5 - 10 |

**cULus Recognized**
Approval ID: E60425

| | Nominal voltage $U_N$ | Nominal current $I_N$ | Cross section AWG | Cross section $mm^2$ |
|---|---|---|---|---|
| B | | | | |
| | 600 V | 30 A | 20 - 8 | - |
| C | | | | |
| | 600 V | 30 A | 20 - 8 | - |
| F | | | | |
| | 1000 V | 30 A | 20 - 8 | - |

**EAC**
Approval ID: KZ7500651131219505

## Classifications

### ECLASS

| | |
|---|---|
| ECLASS-13.0 | 27250109 |
| ECLASS-15.0 | 27250109 |

### ETIM

| | |
|---|---|
| ETIM 10.0 | EC000902 |

### UNSPSC

| | |
|---|---|
| UNSPSC 21.0 | 39121400 |

## Environmental product compliance

EU RoHS

| | |
|---|---|
| Fulfills EU RoHS substance requirements | Yes, No exemptions |

China RoHS

| | |
|---|---|
| Environment friendly use period (EFUP) | EFUP-E |
| | No hazardous substances above the limits |

EU REACH SVHC

| | |
|---|---|
| REACH candidate substance (CAS No.) | No substance above 0.1 wt% |


Phoenix Contact 2026 © - all rights reserved
https://www.phoenixcontact.com



Phoenix Contact USA
586 Fulling Mill Road
Middletown, PA 17057, United States
(+717) 944-1300
info@phoenixcon.com