SK 14 - Shield connection terminal block

3025176

https://www.phoenixcontact.com/us/products/3025176

Please be informed that the data shown in this PDF document is generated from our online catalog. Please find the complete data in the user documentation. Our general terms of use for downloads are valid.

SCREW



Shield connection clamp, for shield on busbars, contact resistance < 1 mΩ

Your advantages

- Easy handling
- Spring-loaded, large-surface pressure plate
- Suitable for direct and busbar mounting
- Knurled screw
- As components, it is not possible to certify shield connections in accordance with the requirements of the directive and standards for electrical equipment in potentially explosive areas. As such, shield connection clamps can be used in the Ex area even without an appropriate approval or marking.

Commercial data

Item number	3025176
Packing unit	10 pc
Minimum order quantity	10 pc
Sales key	BE75
Product key	BE7512
GTIN	4017918130305
Weight per piece (including packing)	20.5 g
Weight per piece (excluding packing)	20.313 g
Customs tariff number	85369010
Country of origin	DE

Technical data

Notes

General

Note	The shield connection clamps must not be used for strain relief of cables/conductors.
	Do not use for pretective conductor connection.

Product properties

Product type	Shield connection clamp
Pitch	17 mm
Number of connections	1
Number of rows	1

Electrical properties

Contact resistance	< 0.001 Ω

Connection data

Grounding foot	Yes
Connection method	Screw connection
Screw thread	M4
Tightening torque	0.8 ... 0.8 Nm

Dimensions

Dimensional drawing	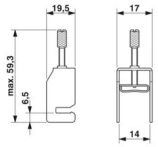
Width	17 mm
Height	19.5 mm
Depth	59.3 mm
Pitch	17 mm

External dimensions

Outside diameter	3 mm ... 14 mm

Material specifications

Color	silver-colored
Material	Steel

Cable/line

External cable diameter	3 mm ... 14 mm

Mechanical properties

Mechanical data

Open side panel	No

Mounting

Mounting type	Neutral busbar

Drawings

Dimensional drawing

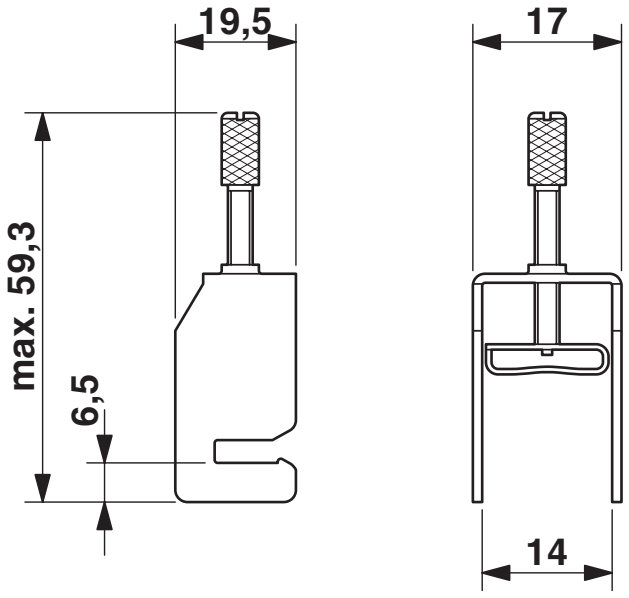

Dimensional drawing

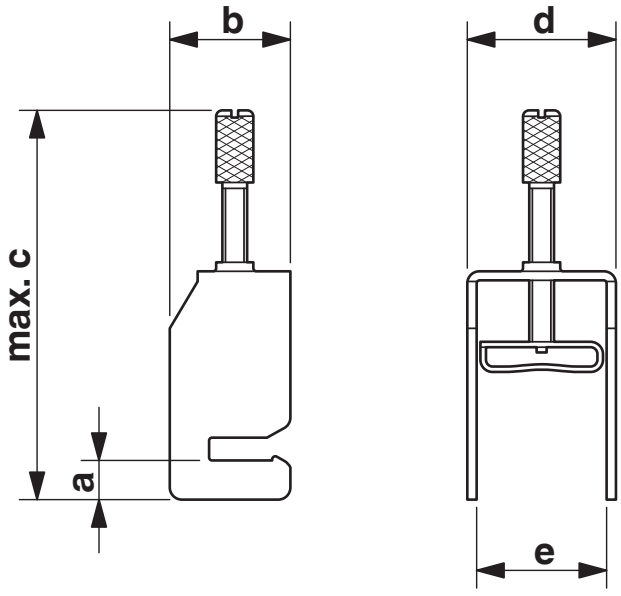

Diagram

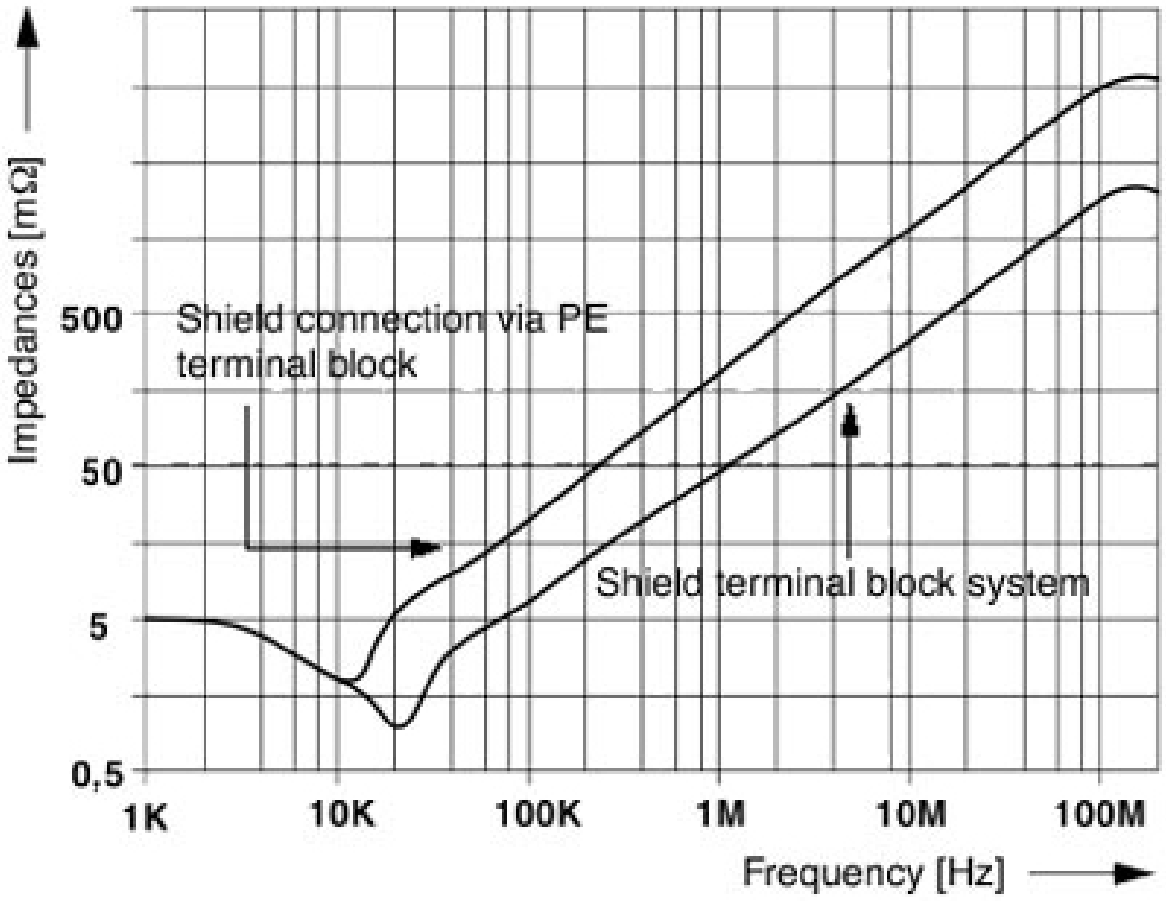
Impedances [mΩ]
500
50
5
0,5
Shield connection via PE terminal block
Shield terminal block system
1K
10K
100K
1M
10M
100M
Frequency [Hz]

Classifications

ECLASS

ECLASS-13.0	27250309
ECLASS-15.0	27250309

ETIM

ETIM 10.0	EC002020

UNSPSC

UNSPSC 21.0	39121400

Environmental product compliance

EU RoHS

Fulfills EU RoHS substance requirements	Yes, No exemptions

China RoHS

Environment friendly use period (EFUP)	EFUP-E
	No hazardous substances above the limits

EU REACH SVHC

REACH candidate substance (CAS No.)	No substance above 0.1 wt%

EF3.1 Climate Change

CO2e kg	0.072 kg CO2e

Phoenix Contact 2026 © - all rights reserved
https://www.phoenixcontact.com

Phoenix Contact USA
586 Fulling Mill Road
Middletown, PA 17057, United States
(+717) 944-1300
info@phoenixcon.com