UK 3D-MSTBV-5,08 - Feed-through terminal block

3002131

https://www.phoenixcontact.com/us/products/3002131

Please be informed that the data shown in this PDF document is generated from our online catalog. Please find the complete data in the user documentation. Our general terms of use for downloads are valid.





Feed-through terminal block, nom. voltage: 250 V, nominal current: 24 A, number of connections: 3, number of positions: 1, connection method: Screw/plug-in connection, 1 level, cross section: 0.2 mm^2 - 4 mm^2, mounting type: NS 32, NS 35/15, NS 35/7,5, color: gray

Commercial data

Item number	3002131
Packing unit	50 pc
Minimum order quantity	50 pc
Sales key	BE12
Product key	BE1241
GTIN	4017918090142
Weight per piece (including packing)	11.88 g
Weight per piece (excluding packing)	11.88 g
Customs tariff number	85369010
Country of origin	PL

Technical data

Notes

General	Current and voltage are determined by the plug used.

General

Note	With a free-hanging connection, an insulating foil has to be placed between the plug connection and electrically conductive surfaces.

Product properties

Product type	Feed-through terminal block
Product family	UK 3D-MSTBV
Number of positions	1
Pitch	5.08 mm
Number of connections	3
Number of rows	2
Potentials	1

Insulation characteristics

Overvoltage category	III
Degree of pollution	3

Electrical properties

Rated surge voltage	4 kV

Connection data

Number of connections per level	3

1 level

Connection method	Screw/plug-in connection
Screw thread	M3
Tightening torque	0.5 ... 0.6 Nm
Stripping length	8 mm
Internal cylindrical gage	A3
Conductor cross-section rigid	0.2 mm² ... 4 mm²
Cross section AWG	24 ... 12 (converted acc. to IEC)
Conductor cross-section flexible	0.2 mm² ... 2.5 mm²
Conductor cross-section, flexible [AWG]	24 ... 14 (converted acc. to IEC)
Conductor cross-section flexible (ferrule without plastic sleeve)	0.25 mm² ... 2.5 mm²
Flexible conductor cross-section (ferrule with plastic sleeve)	0.25 mm² ... 1.5 mm²
2 conductors with same cross section, rigid	0.2 mm² ... 1.5 mm²
2 conductors with same cross section, flexible	0.2 mm² ... 1 mm²
2 conductors with same cross section, flexible, with ferrule without plastic sleeve	0.25 mm² ... 1.5 mm²
2 conductors with the same cross section, flexible, with TWIN	0.5 mm² ... 1 mm²

ferrule with plastic sleeve	
Nominal current	24 A (terminal current - MSTB connection: 12 A)
Maximum load current	12 A (with 4 mm² conductor cross-section)
Nominal voltage	250 V

Dimensions

Dimensional drawing	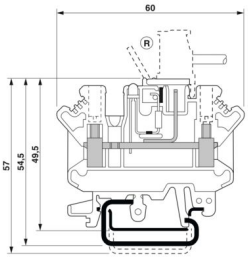
Width	5.08 mm
End cover width	2 mm
Height	60 mm
Depth on NS 32	54.5 mm
Depth on NS 35/7,5	49.5 mm
Depth on NS 35/15	57 mm
Pitch	5.08 mm

Material specifications

Color	gray (RAL 7042)
Flammability rating according to UL 94	V2
Insulating material group	I
Insulating material	PA
Contact surface	Tin Sn
Static insulating material application in cold	-40 °C
Relative insulation material temperature index (Elec., UL 746 B)	125 °C

Electrical tests

Surge voltage test

Test voltage setpoint	4.8 kV
Result	Test passed

Temperature-rise test

Requirement temperature-rise test	Increase in temperature ≤ 45 K
Result	Test passed
Short-time withstand current 2.5 mm²	0.3 kA
Result	Test passed

Power-frequency withstand voltage

Test voltage setpoint	1.5 kV

Result	Test passed

Mechanical properties

Mechanical data

Open side panel	Yes

Mechanical tests

Mechanical strength

Result	Test passed

Attachment on the carrier

Result	Test passed

Test for conductor damage and slackening

Rotation speed	10 rpm
Revolutions	135
Conductor cross-section/weight	0.2 mm² / 0.2 kg
	2.5 mm² / 0.7 kg
	4 mm² / 0.9 kg
Result	Test passed

Environmental and real-life conditions

Service life

Insertion/withdrawal cycles	100

Needle-flame test

Time of exposure	30 s
Result	Test passed

Oscillation/broadband noise

Specification	DIN EN 50155 (VDE 0115-200):2022-06
Spectrum	Long life test category 2, bogie-mounted
Frequency	f_1 = 5 Hz to f_2 = 250 Hz
ASD level	6.12 (m/s²)²/Hz
Acceleration	3.12g
Test duration per axis	5 h
Test directions	X-, Y- and Z-axis
Result	Test passed

Shocks

Specification	DIN EN 50155 (VDE 0115-200):2022-06
Pulse shape	Half-sine
Acceleration	30g
Shock duration	18 ms
Number of shocks per direction	3

Test directions	X-, Y- and Z-axis (pos. and neg.)
Result	Test passed

Ambient conditions

Ambient temperature (operation)	-60 °C ... 100 °C (max. operating temperature range including self-heating, see derating curve)
Ambient temperature (storage/transport)	-25 °C ... 60 °C (for a short time, not exceeding 24 h, -60 °C to +70 °C)
Ambient temperature (assembly)	-5 °C ... 70 °C
Ambient temperature (actuation)	-5 °C ... 70 °C
Permissible humidity (operation)	20 % ... 90 %
Permissible humidity (storage/transport)	30 % ... 70 %

Mounting

Mounting type	NS 32
	NS 35/15
	NS 35/7,5

Drawings

Dimensional drawing

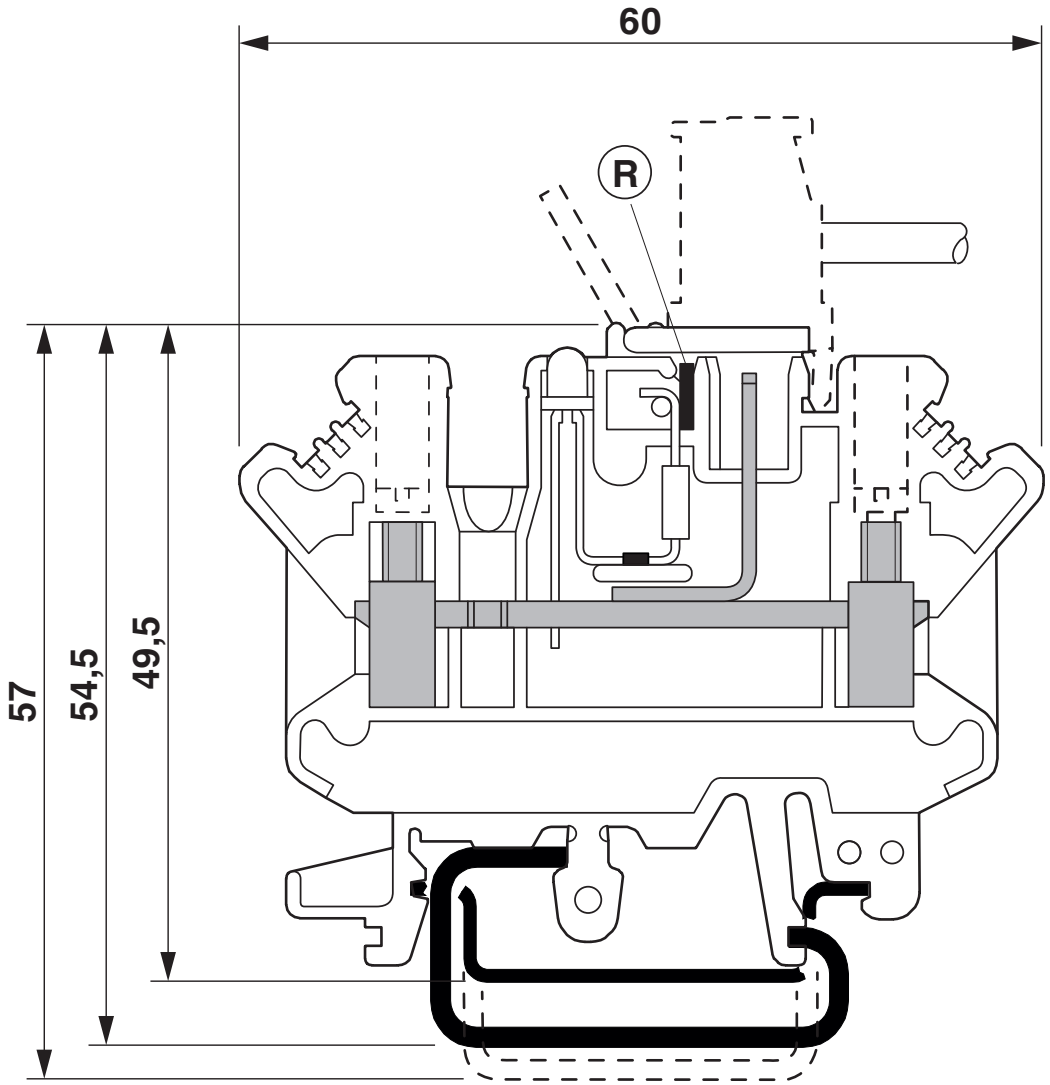

Approvals

To download certificates, visit the product detail page: https://www.phoenixcontact.com/us/products/3002131

CSA
Approval ID: 13631

	Nominal voltage U_N	Nominal current I_N	Cross section AWG	Cross section mm^2
keine				
	300 V	20 A	28 - 12	-

EAC
Approval ID: KZ7500651131219505

cULus Recognized
Approval ID: E60425

	Nominal voltage U_N	Nominal current I_N	Cross section AWG	Cross section mm^2
B				
	300 V	20 A	30 - 12	-
F				
	250 V	20 A	30 - 12	-
D				
	300 V	10 A	30 - 12	-

Classifications

ECLASS

ECLASS-13.0	27250101
ECLASS-15.0	27250101

ETIM

ETIM 10.0	EC000897

UNSPSC

UNSPSC 21.0	39121400

Environmental product compliance

EU RoHS

Fulfills EU RoHS substance requirements	Yes, No exemptions

China RoHS

Environment friendly use period (EFUP)	EFUP-E
	No hazardous substances above the limits

EU REACH SVHC

REACH candidate substance (CAS No.)	No substance above 0.1 wt%

EF3.1 Climate Change

CO2e kg	0.056 kg CO2e

Phoenix Contact 2026 © - all rights reserved
https://www.phoenixcontact.com

Phoenix Contact USA
586 Fulling Mill Road
Middletown, PA 17057, United States
(+717) 944-1300
info@phoenixcon.com