PLC-OSC- 24DC/ 24DC/ 10/R - Solid-state relay module

2982702

https://www.phoenixcontact.com/us/products/2982702

Please be informed that the data shown in this PDF document is generated from our online catalog. Please find the complete data in the user documentation. Our general terms of use for downloads are valid.



PLC-INTERFACE with checkback contact, consisting of basic terminal block with screw connection and integrated miniature solid-state relay, for mounting on NS 35/7,5 DIN rail, 1 N/O contact, input: 24 V DC, output: 8 V DC ... 33 V DC/10 A

Your advantages

- Resistant to vibrations and shocks
- Wear-free switching with no contact bounce
- Protective circuit in input and output
- Status indicator
- DC voltage outputs up to 24 V DC/10 A
- Option of bridging adjacent modules

Commercial data

Item number	2982702
Packing unit	10 pc
Minimum order quantity	10 pc
Sales key	C461
Product key	DK6223
GTIN	4046356155748
Weight per piece (including packing)	36.1 g
Weight per piece (excluding packing)	37.64 g
Customs tariff number	85364190
Country of origin	DE

Technical data

Notes

Notes on operation	The PLC-ATP divider plate must be installed for voltages greater than 250 V (L1, L2, L3) between identical terminal blocks on adjacent modules.
Notes on operation	The PLC-ATP divider plate should be installed for safe isolation between adjacent modules
Notes on operation	Do not connect adjacent channels to SELV/ PELV and voltages dangerous to the touch.
Notes on operation	The system installer must ensure the touch protection of the product (at voltages > 25 V AC/60 V DC). The product is a built-in device without protection against direct contact.
Notes on operation	At least one functional insulation against adjacent modules is complied with in the support rail direction. If the application has higher requirements on the insulation (basic or reinforced insulation), then these must be realized through suitable measures (e. g., divider plates).
Notes on operation	Do not use to separate SELV / PELV circuits from other circuits, because safe isolation is not guaranteed.

Product properties

Product type	Solid-state relay module
Product family	PLC-INTERFACE
Application	With integrated solid-state relay
Operating mode	100% operating factor

Insulation characteristics: Air clearances and creepage distances between the power circuits

Insulation	Basic insulation
Overvoltage category	III
Pollution degree	2

Data management status

Date of last data management	16.10.2026

Electrical properties

Maximum power dissipation for nominal condition	0.07 W

Air clearances and creepage distances between the power circuits

Rated insulation voltage	50 V DC
Rated surge voltage	0.8 kV

Input data

Rated actuating voltage U_C	24 V DC
Rated actuating current I_C	3.5 mA
Switching threshold "0" signal in reference to U_N	< 0.4
Switching threshold "1" signal in reference to U_N	> 0.8
Typical response time	450 µs

Typical turn-off time	300 µs
Operating voltage display	Yellow LED
Protective circuit	Reverse polarity protection; Polarity protection diode
	Surge protection
Surge voltage protection	> 33 V
Transmission frequency	100 Hz

Output data

DC voltage output

Contact switching type	1 N/O contact
Design of digital output	electronic
Contact connection type	Power contact
Output voltage range	8 V DC ... 33 V DC
Limiting continuous current	10 A (see derating curve)
Voltage drop at max. limiting continuous current	< 50 mV
Output circuit	3-wire, grounded, short-circuit-proof, reset by briefly turning off the control voltage
Protective circuit	Inverse diode
	Surge protection
Utilization category	DC12, 10 A (N/O contact)/24 V DC

Fault signal output; switches when the load current is excessive (> 11 A)

Output voltage range	3 V DC ... 33 V DC
Limiting continuous current	100 mA
Surge voltage protection	> 33 V
Voltage drop at max. limiting continuous current	< 1.2 V
Output circuit	2-conductor, floating
Error indication	Red LED
Protective circuit	Reverse polarity protection; Polarity protection diode
	Surge protection; Suppressor diode

Connection data

Connection method	Screw connection
Stripping length	8 mm
Screw thread	M3
Conductor cross-section rigid	0.14 mm² ... 2.5 mm²
Conductor cross-section flexible	0.14 mm² ... 2.5 mm²
	0.2 mm² ... 2.5 mm² (Single ferrule)
	2x 0.5 mm² ... 1.5 mm² (TWIN ferrule)
Conductor cross-section AWG	26 ... 14
Tightening torque	0.45 Nm ... 0.55 Nm (Usually these terminal blocks must be supported during conductor connection (held by one hand, supported on the housing))

Dimensions

Item dimensions

Width	6.2 mm
Height	80 mm
Depth	94 mm

Material specifications

Color	gray (RAL 7042)
Flammability rating according to UL 94 (Housing)	V0 (Housing)

Environmental and real-life conditions

Ambient conditions

Degree of protection	IP20
Degree of protection (Installation location)	IP54 (Installation location)
Ambient temperature (operation)	-25 °C ... 60 °C
Ambient temperature (storage/transport)	-40 °C ... 85 °C
Altitude	≤ 4000 m (observe derating)

Approvals

CE

Certificate	CE-compliant

UKCA

Certificate	UKCA-compliant

Shipbuilding approval

Certificate	TAE0000196

Corrosive gas test

Identification	ISA-S71.04. G3 Harsh Group
	EN 60068-2-60

Shipbuilding data

Temperature	D
Humidity	A
Vibration	B/C
EMC	B
Enclosure	Required protection according to the Rules shall be provided upon installation on board

EMC data

Electromagnetic compatibility	Conformance with EMC directive
Low Voltage Directive	Conformance with Low Voltage Directive

Standards and regulations

Air clearances and creepage distances between the power circuits

Standards/regulations	IEC 60947-5-1

Mounting

Mounting type	DIN rail mounting
Assembly note	in rows with zero spacing
Mounting position	any

Drawings

Diagram

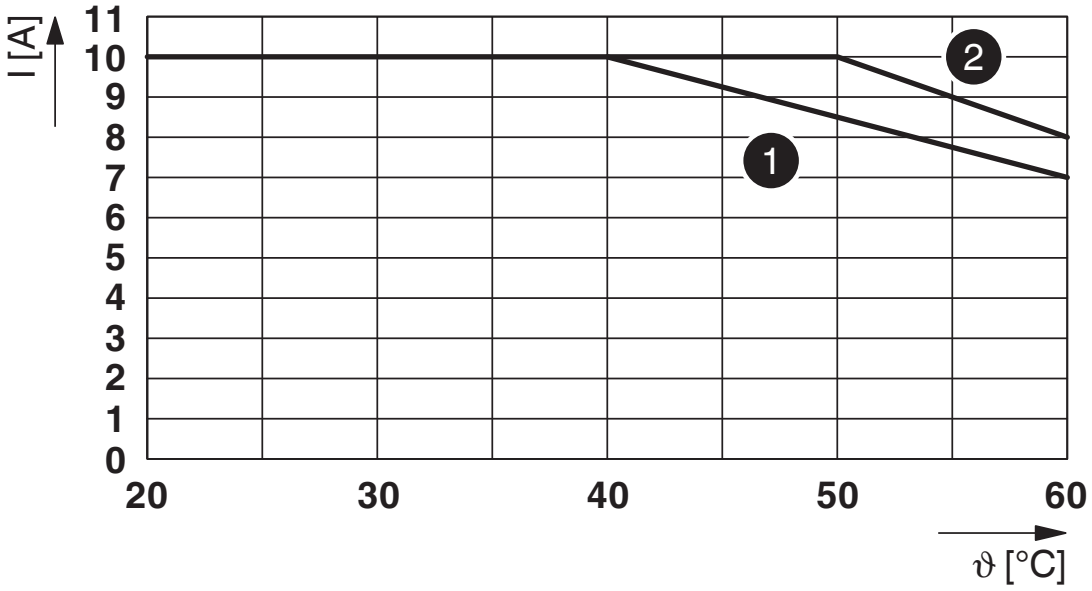

Limiting continuous current
1) Aligned without spacing
2) Aligned with > 6 mm spacing

Once derating begins, the curve shifts to the left by the corresponding factor:
2000 m = 1
2500 m = 0.953
3000 m = 0.906
3500 m = 0.859
4000 m = 0.813

Circuit diagram

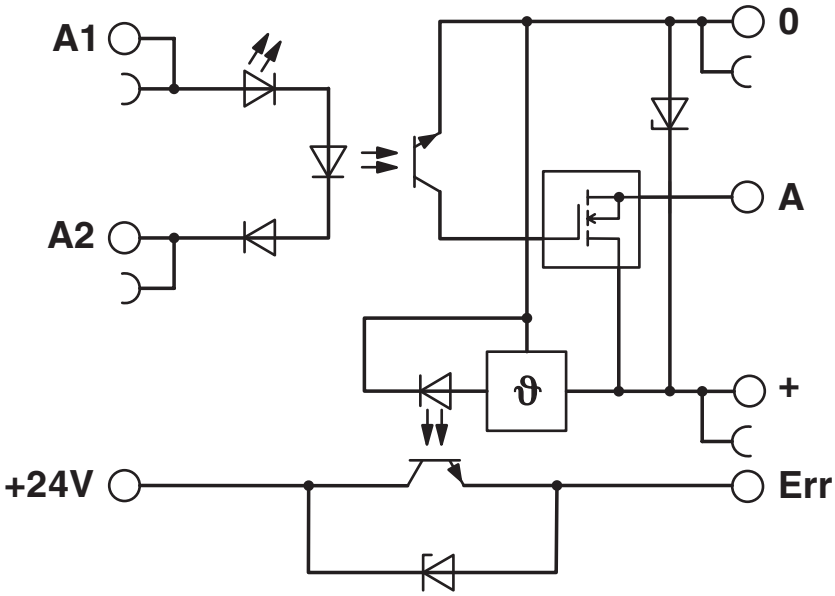

Approvals

To download certificates, visit the product detail page: https://www.phoenixcontact.com/us/products/2982702

cULus Listed
Approval ID: E140324

cULus Listed
Approval ID: E140324

cULus Listed
Approval ID: E140324

DNV
Approval ID: TAE0000196

Classifications

ECLASS

ECLASS-13.0	27371604
ECLASS-15.0	27371604

ETIM

ETIM 10.0	EC001504

UNSPSC

UNSPSC 21.0	39122300

Environmental product compliance

EU RoHS

Fulfills EU RoHS substance requirements	Yes
Exemption	7(a), 7(c)-I

China RoHS

Environment friendly use period (EFUP)	EFUP-50
	An article-related China RoHS declaration table can be found in the download area for the respective article under "Manufacturer declaration". For all articles with EFUP-E, no China RoHS declaration table issued and required.

EU REACH SVHC

REACH candidate substance (CAS No.)	Lead(CAS: 7439-92-1)
SCIP	f74b5dc1-e15c-4f0b-93cb-d919e783758a

EF3.1 Climate Change

CO2e kg	1.994 kg CO2e

Phoenix Contact 2026 © - all rights reserved
https://www.phoenixcontact.com

Phoenix Contact USA
586 Fulling Mill Road
Middletown, PA 17057, United States
(+717) 944-1300
info@phoenixcon.com