PSR-SCP- 24DC/URD3/4X1/2X2/3 - Extension module

2981732

https://www.phoenixcontact.com/us/products/2981732

Please be informed that the data shown in this PDF document is generated from our online catalog. Please find the complete data in the user documentation. Our general terms of use for downloads are valid.



1-channel contact extension with TBUS interface, 4 N/O contacts, 1 N/C contact, 1 confirmation current path, the contacts have an off-delay (0.3 … 3 s), Cat. 3, PL e in accordance with EN ISO 13849, plug-in terminal blocks with screw connection, width: 22.5 mm

Your advantages

- Up to Cat. 3/PL e in accordance with EN ISO 13849-1, SIL 3 in accordance with EN IEC 62061, SIL 3 in accordance with IEC 61508
- Each with 4 enabling, 1 signaling, and 1 confirmation current path, all with dropout delay
- 1-channel control

ELEKTROGERÄTE RÜCKNAHME

Commercial data

Item number	2981732
Packing unit	1 pc
Minimum order quantity	1 pc
Sales key	DN01
Product key	DNA233
GTIN	4046356103695
Weight per piece (including packing)	191.8 g
Weight per piece (excluding packing)	170.37 g
Customs tariff number	85371098
Country of origin	DE

Technical data

Product properties

Product type	Safety relays
Product family	PSRclassic
Application	Extension module
Control	1-channel
Relay type	Electromechanical relay with force-guided contacts in accordance with IEC/EN 61810-3

Insulation characteristics

Overvoltage category	II, III (See the section “Insulation coordination”)
Degree of pollution	2

Times

Typical response time	typ. 150 ms (For U_s autostart)
Typical release time	typ. 20 ms (At Us on demand via sensor circuit)
Delay time range	0.3 s ... 3 s ±50 %
Recovery time	1 s (following demand of the safety function)

Electrical properties

Nominal operating mode	100% operating factor
Rated insulation voltage	250 V
Rated surge voltage/insulation	See data sheet, section “Insulation coordination”.

Supply

Designation	A1/A2, PSR-TBUS
Rated control circuit supply voltage U_S	24 V DC -15 % / +10 %
Rated control supply current I_S	typ. 94 mA (at U_S)
Power consumption at U_S	typ. 2.3 W
Protective circuit	Serial protection against polarity reversal
	Suppressor diode

Input data

Digital: Control input (K1/K2)

Description of the input	safety-related
Protective circuit	Suppressor diode

Output data

Relay: Enabling current paths (27/28, 37/38, 47/48, 57/58)

Output description	2 N/O contacts in series, safety-related, floating
Number of outputs	4
Contact switching type	4 enabling current paths
Contact material	$AgSnO_2$

Switching voltage	min. 15 V AC/DC
	max. 250 V AC/DC
Switching power	min. 0.4 W
Inrush current	min. 25 mA AC/DC
	max. 6 A
Switching capacity	5 A (250 V (AC15))
	5 A (24 V (DC13))
Switching capacity (360/h cycles)	5 A (250 V (AC15))
Limiting continuous current	6 A
Sq. Total current	50 A^2 (observe derating)
Switching frequency	1 Hz
Mechanical service life	10x 10^6 cycles
Output fuse	10 A gL/gG NEOZED (High demand)
	4 A gL/gG (Low demand)

Relay: Confirmation current path (15/16)

Output description	2 NC in series, non-floating, safety-related
Number of outputs	1
Contact switching type	1 confirmation current path
Contact material	$AgSnO_2$
Switching voltage	max. 26.4 V
Switching frequency	1 Hz

Relay: Signaling current path (65/66)

Output description	2 N/C contacts parallel, non-safety-related, floating
Number of outputs	1
Contact switching type	1 signaling current path
Contact material	$AgSnO_2$
Switching voltage	min. 15 V
	max. 250 V AC/DC
Switching power	min. 0.4 W
Inrush current	min. 25 mA
	max. 3 A
Limiting continuous current	3 A
Switching frequency	1 Hz

Connection data

Connection technology

pluggable	yes

Conductor connection

Connection method	Screw connection
Conductor cross-section rigid	0.2 mm² ... 2.5 mm²
Conductor cross-section flexible	0.2 mm² ... 2.5 mm²
Conductor cross-section AWG	24 ... 12

Stripping length	7 mm
Screw thread	M3

Signaling

Status display	2 x LED (green)
Operating voltage display	1 x LED (green)

Dimensions

Width	22.5 mm
Height	99 mm
Depth	114.5 mm

Material specifications

Color (Housing)	yellow (RAL 1018)
Housing material	PA

Characteristics

Safety data

Stop category (EN 60204-1)	1

Safety data: EN ISO 13849

Performance level (PL)	e (In conjunction with suitable evaluating device)

Safety data: IEC 61508 - High demand

Safety Integrity Level (SIL)	3 (In conjunction with suitable evaluating device)

Safety data: IEC 61508 - Low demand

Safety Integrity Level (SIL)	3 (In conjunction with suitable evaluating device)

Safety data: EN IEC 62061

Safety Integrity Level (SIL)	3 (In conjunction with suitable evaluating device)

Environmental and real-life conditions

Ambient conditions

Degree of protection	IP20
Min. degree of protection of inst. location	IP54
Ambient temperature (operation)	-20 °C ... 55 °C
Ambient temperature (storage/transport)	-40 °C ... 70 °C
Maximum altitude	≤ 2000 m (Above sea level)
Max. permissible humidity (storage/transport)	75 % (on average, 85% infrequently, non-condensing)
Max. permissible relative humidity (operation)	75 % (on average, 85% infrequently, non-condensing)

Mounting

Mounting type	DIN rail mounting
Mounting position	any

Drawings

Circuit diagram

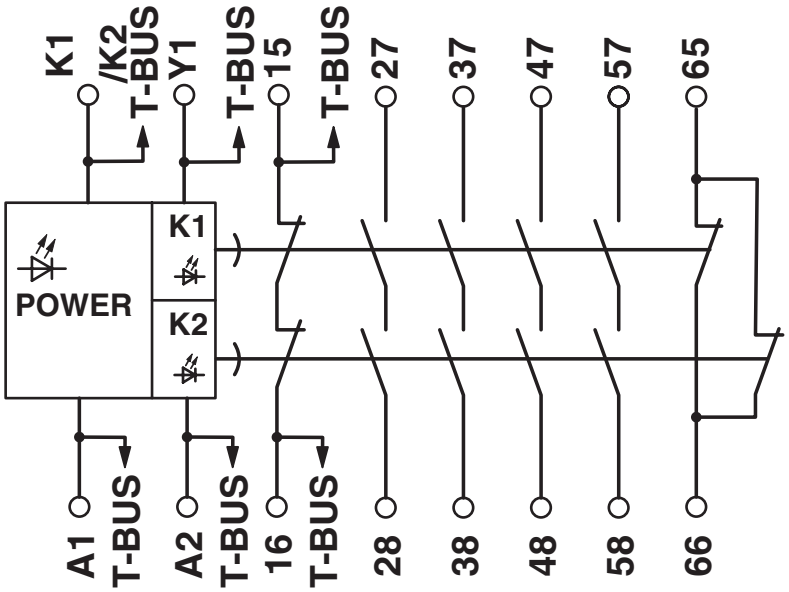

Block diagram

Approvals

To download certificates, visit the product detail page: https://www.phoenixcontact.com/us/products/2981732

cULus Listed
Approval ID: E140324

Functional Safety
Approval ID: 968/EZ 366.05/23

Classifications

ECLASS

ECLASS-13.0	27371819
ECLASS-15.0	27371819

ETIM

ETIM 10.0	EC001449

UNSPSC

UNSPSC 21.0	39122200

Environmental product compliance

EU RoHS

Fulfills EU RoHS substance requirements	Yes
Exemption	34, 7(a), 7(a)-I, 7(c)-I

China RoHS

Environment friendly use period (EFUP)	EFUP-50
	An article-related China RoHS declaration table can be found in the download area for the respective article under "Manufacturer declaration". For all articles with EFUP-E, no China RoHS declaration table issued and required.

EU REACH SVHC

REACH candidate substance (CAS No.)	Lead(CAS: 7439-92-1)
SCIP	cb82a495-4de5-4c08-a704-e94a3c370246

Phoenix Contact 2026 © - all rights reserved
https://www.phoenixcontact.com

Phoenix Contact USA
586 Fulling Mill Road
Middletown, PA 17057, United States
(+717) 944-1300
info@phoenixcon.com