PLC-OSC- 24DC/ 48DC/500/W - Solid-state relay module

2980636

https://www.phoenixcontact.com/us/products/2980636

Please be informed that the data shown in this PDF document is generated from our online catalog. Please find the complete data in the user documentation. Our general terms of use for downloads are valid.



PLC-INTERFACE with electronic changeover contact, consisting of PLC-BSC.../21 basic terminal block with screw connection and integrated miniature solid-state relay, for mounting on NS 35/7,5 DIN rail, 1 changeover contact, input: 24 V DC, output: 3 V DC ... 48 V DC/500 mA

Your advantages

- Wear-free switching with no contact bounce
- Resistant to vibrations and shocks
- Protective circuit in input and output
- Status indicator
- Electronic changeover contact output up to 48 V DC/500 mA
- Option of bridging adjacent modules

Commercial data

Item number	2980636
Packing unit	10 pc
Minimum order quantity	10 pc
Sales key	C461
Product key	DK6223
GTIN	4046356051378
Weight per piece (including packing)	34.12 g
Weight per piece (excluding packing)	33.47 g
Customs tariff number	85364190
Country of origin	DE

Technical data

Product properties

Product type	Solid-state relay module
Product family	PLC-INTERFACE
Application	With integrated solid-state relay
Operating mode	100% operating factor

Insulation characteristics: Standards/regulations

Insulation	Basic insulation
Overvoltage category	III
Pollution degree	2

Data management status

Date of last data management	13.10.2026

Electrical properties

Maximum power dissipation for nominal condition	0.07 W

Standards/regulations

Rated insulation voltage	300 V
Rated surge voltage	4 kV

Input data

Nominal input voltage U_N	24 V DC
Input voltage range in reference to U_N	0.8 ... 1.2
Input voltage range	19.2 V DC ... 28.8 V DC
Switching threshold "0" signal in reference to U_N	≤ 0.4
Switching threshold "1" signal in reference to U_N	≥ 0.8
Typical input current at U_N	3 mA
Typical response time	0.03 ms
Typical turn-off time	0.15 ms
Operating voltage display	Yellow LED
Protective circuit	Reverse polarity protection; Polarity protection diode
	Surge protection
Transmission frequency	1000 Hz

Output data

Contact switching type	1 changeover contact
Design of digital output	electronic
Contact connection type	Power contact
Output voltage range	3 V DC ... 48 V DC
Limiting continuous current	500 mA (see derating curve)
Load current	≥ 10 mA (Terminal block 12)
	≥ 5 mA (Terminal block 14)

Quiescent current	≤ 1.5 mA (Terminal block 12)
	≤ 0.05 mA (Terminal block 14)
Voltage drop at max. limiting continuous current	< 1.2 V
Output circuit	2-conductor, floating
Protective circuit	Reverse polarity protection; Polarity protection diode
	Surge protection

Connection data

Connection method	Screw connection
Stripping length	8 mm
Screw thread	M3
Conductor cross-section rigid	0.14 mm² ... 2.5 mm²
Conductor cross-section flexible	0.14 mm² ... 2.5 mm²
	0.2 mm² ... 2.5 mm² (Single ferrule)
	2x 0.5 mm² ... 1.5 mm² (TWIN ferrule)
Conductor cross-section AWG	26 ... 14
Tightening torque	0.45 Nm ... 0.55 Nm (Usually these terminal blocks must be supported during conductor connection (held by one hand, supported on the housing))

Dimensions

Item dimensions

Width	6.2 mm
Height	80 mm
Depth	94 mm

Material specifications

Color	gray (RAL 7042)
Flammability rating according to UL 94 (Housing)	V0 (Housing)

Environmental and real-life conditions

Ambient conditions

Ambient temperature (operation)	-25 °C ... 60 °C
Ambient temperature (storage/transport)	-40 °C ... 85 °C

Approvals

Corrosive gas test

Identification	ISA-S71.04. G3 Harsh Group
	EN 60068-2-60

Standards and regulations

Standards/regulations

Standards/regulations	IEC 60664

	EN 50178

Mounting

Mounting type	DIN rail mounting
Assembly note	in rows with zero spacing
Mounting position	any

Drawings

Application drawing

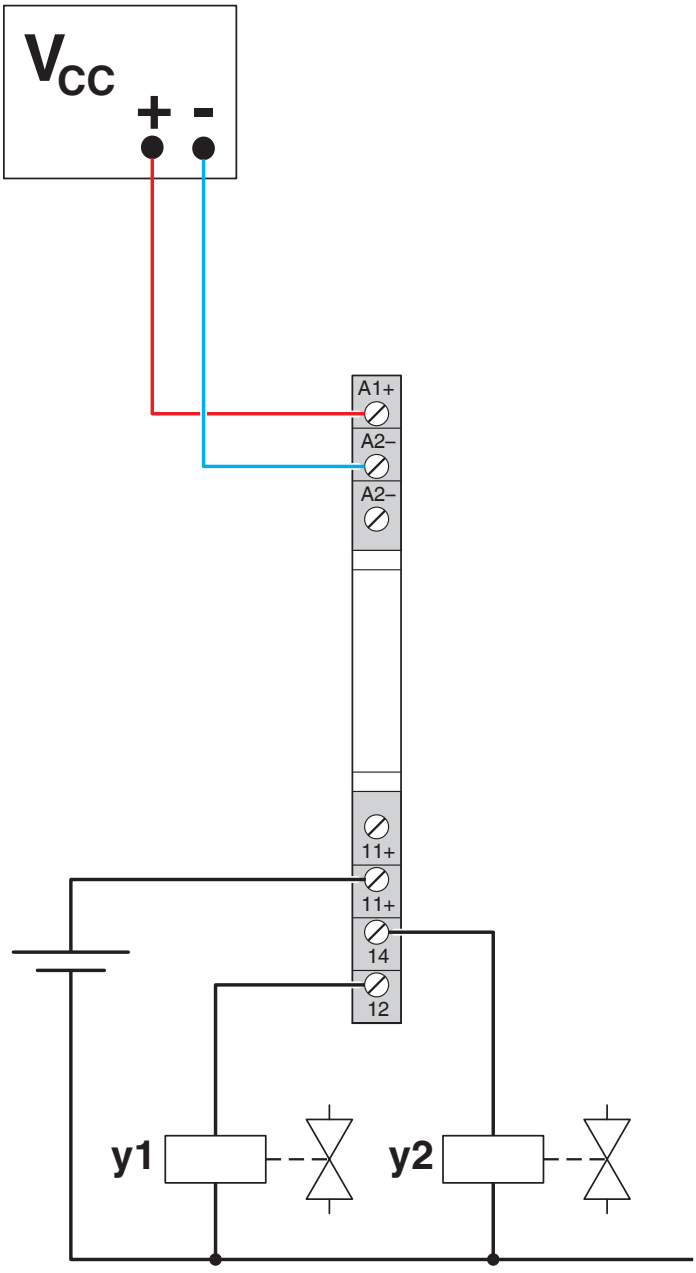

Diagram

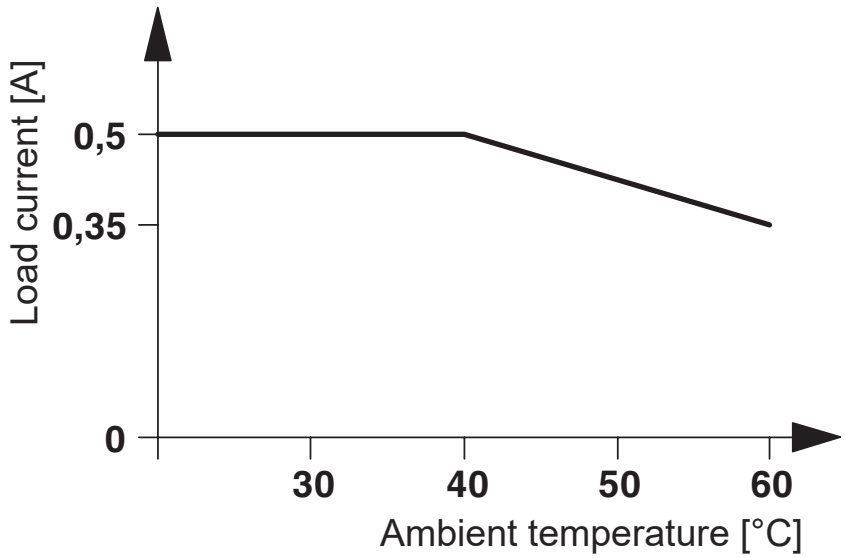

The figure shows the derating curve for PLC-...24DC/48DC/500/W

Circuit diagram

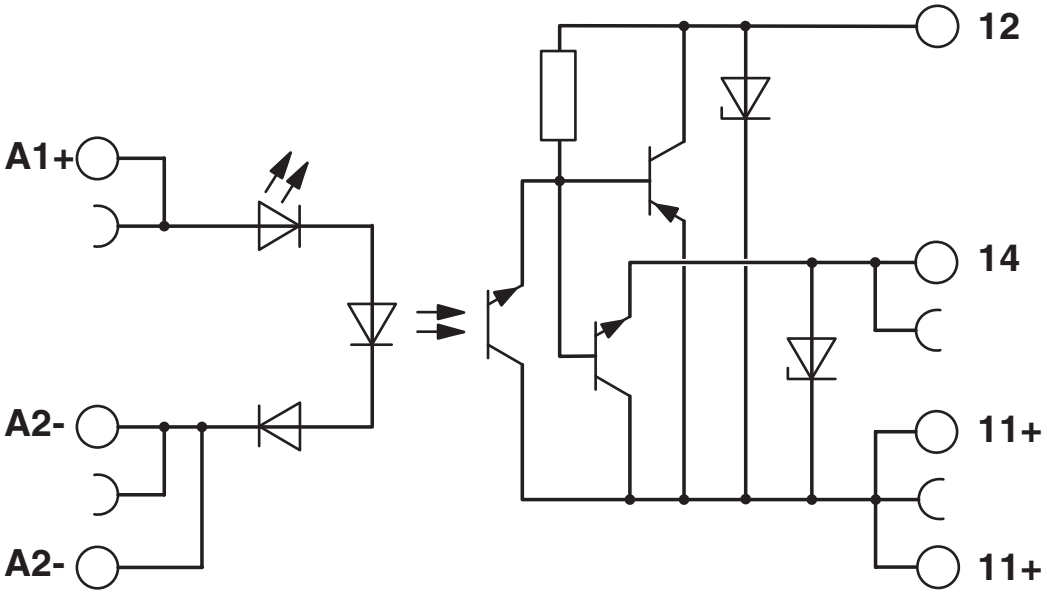

Approvals

To download certificates, visit the product detail page: https://www.phoenixcontact.com/us/products/2980636

cULus Listed
Approval ID: E140324

cULus Listed
Approval ID: E140324

cULus Listed
Approval ID: E140324

Classifications

ECLASS

ECLASS-13.0	27371604
ECLASS-15.0	27371604

ETIM

ETIM 10.0	EC001504

UNSPSC

UNSPSC 21.0	39122300

Environmental product compliance

EU RoHS

Fulfills EU RoHS substance requirements	Yes
Exemption	7(a), 7(c)-I

China RoHS

Environment friendly use period (EFUP)	EFUP-50
	An article-related China RoHS declaration table can be found in the download area for the respective article under "Manufacturer declaration". For all articles with EFUP-E, no China RoHS declaration table issued and required.

EU REACH SVHC

REACH candidate substance (CAS No.)	Lead(CAS: 7439-92-1)
SCIP	0f09da59-40bc-43cd-b727-561effe90045

EF3.1 Climate Change

CO2e kg	1.007 kg CO2e

Phoenix Contact 2026 © - all rights reserved
https://www.phoenixcontact.com

Phoenix Contact USA
586 Fulling Mill Road
Middletown, PA 17057, United States
(+717) 944-1300
info@phoenixcon.com