UMK-BE 11,25 - Base element

2971535

https://www.phoenixcontact.com/us/products/2971535

Please be informed that the data shown in this PDF document is generated from our online catalog. Please find the complete data in the user documentation. Our general terms of use for downloads are valid.

Electronic board base, plug-in module base element



Commercial data

Item number	2971535
Packing unit	10 pc
Minimum order quantity	10 pc
Sales key	AC13
Product key	ACHDCA
GTIN	4017918088392
Weight per piece (including packing)	4.65 g
Weight per piece (excluding packing)	4.72 g
Customs tariff number	84879090
Country of origin	PL

Technical data

Product properties

Product type	Component housing lower part
Housing type	Press-drawn section housings
Housing series	UMK
Product family	UMK BE
Type	Module width 11.25 mm, since the housing can remain open at the top, it is possible for parts to protrude above the actual profile height
Ventilation openings present	no

Dimensions

Dimensional drawing	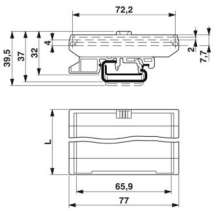
Depth	15.5 mm
Length	11.25 mm

External dimensions

Profile width (external)	77 mm

Internal dimensions

Profile width (internal)	72.2 mm

Material specifications

Color (Housing)	green (RAL 6021)
Material	PA
Flammability rating according to UL 94	V2

Environmental and real-life conditions

Ambient conditions

Ambient temperature (operation)	-40 °C ... 105 °C (depending on power dissipation)
Ambient temperature (storage/transport)	-40 °C ... 55 °C
Ambient temperature (assembly)	-5 °C ... 100 °C
Relative humidity (storage/transport)	80 %

Drawings

Dimensional drawing

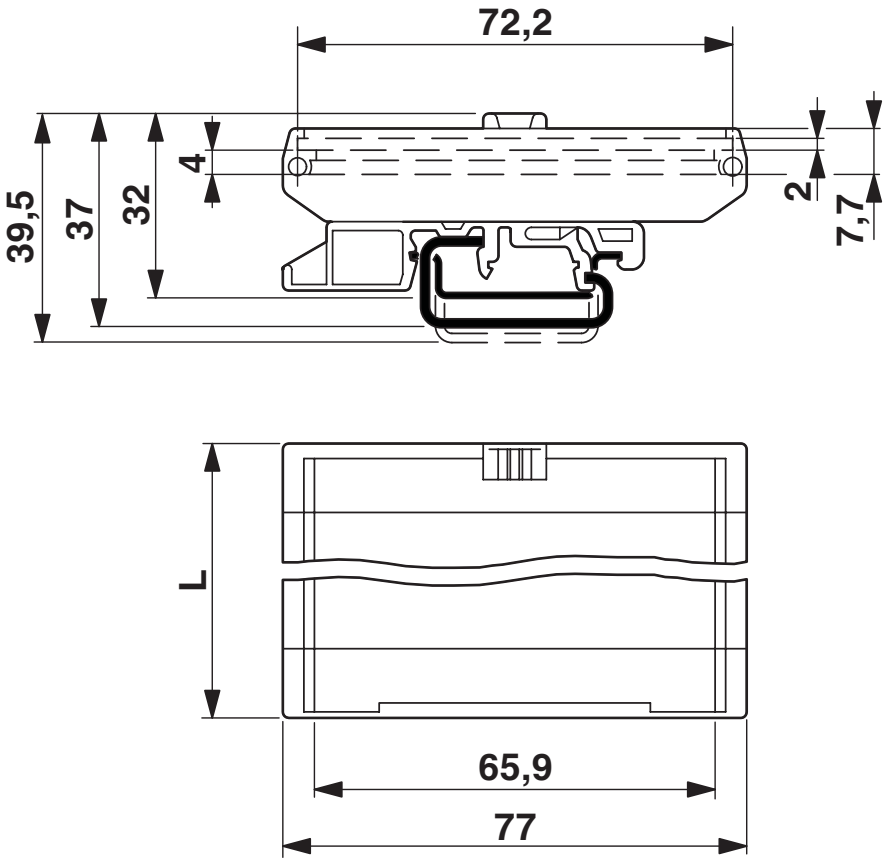

Approvals

To download certificates, visit the product detail page: https://www.phoenixcontact.com/us/products/2971535

UL Recognized
Approval ID: E240868

Classifications

ECLASS

ECLASS-13.0	27190601
ECLASS-15.0	27190601

ETIM

ETIM 10.0	EC002779

UNSPSC

UNSPSC 21.0	31261500

Environmental product compliance

EU RoHS

Fulfills EU RoHS substance requirements	Yes, No exemptions

China RoHS

Environment friendly use period (EFUP)	EFUP-E
	No hazardous substances above the limits

EU REACH SVHC

REACH candidate substance (CAS No.)	No substance above 0.1 wt%

EF3.1 Climate Change

CO2e kg	0.242 kg CO2e

Phoenix Contact 2026 © - all rights reserved
https://www.phoenixcontact.com

Phoenix Contact USA
586 Fulling Mill Road
Middletown, PA 17057, United States
(+717) 944-1300
info@phoenixcon.com