DEK-REL-G24/21 - Relay module

2964500

https://www.phoenixcontact.com/us/products/2964500

Please be informed that the data shown in this PDF document is generated from our online catalog. Please find the complete data in the user documentation. Our general terms of use for downloads are valid.



Relay terminal, with soldered-in miniature power relay, contacts (AgSnO): medium to high loads, 1 changeover contact, input voltage 24 V DC, for mounting on NS 35/7,5, terminal width 6.2 mm

Your advantages

- Less wiring effort, thanks to the use of EB-DIK insertion bridges
- Just 6.2 mm wide
- Cadmium-free relay contacts
- Low warehousing requirements, as the wiring can be done via the changeover contact, N/O contact or N/C contact
- High switching power of 250 V AC / 6 A
- Safe isolation according to DIN EN 50178 (VDE 0160)
- Relay housing with IP67 protection
- LED for indicating the switching state
- 4 kV electrical isolation between input and output

Commercial data

Item number	2964500
Packing unit	10 pc
Minimum order quantity	1 pc
Sales key	C460
Product key	DK61A2
GTIN	4017918117733
Weight per piece (including packing)	24.1 g
Weight per piece (excluding packing)	24.73 g
Customs tariff number	85364190
Country of origin	CN

Technical data

Notes

Note on application	Use of EB 80-DIK... bridges in the DEK terminal blocks: Absorption of humidity from the ambient air as well as an unfavorable tolerance between a larger number of DEK terminal blocks and the EB 80-DIK... bridge may cause (minor) expansion of the DEK housing. When the EB 80-DIK... bridges are used, therefore, it is recommended that these be disconnected after about 10 to 12 DEK terminal blocks and a wire bridge to the next DEK terminal block be inserted in their place.

Product properties

Product type	Relay Module
Product family	DEK
Application	Universal
Operating mode	100% operating factor
Mechanical service life	approx. 10^7 cycles

Insulation characteristics

Insulation	Safe isolation: Control side / contact side
Overvoltage category	III
Pollution degree	2

Data management status

Date of last data management	01.04.2026

Electrical properties

Maximum power dissipation for nominal condition	0.22 W
Test voltage (Winding/contact)	4 kV AC (50 Hz, 1 min., winding/contact)
Rated insulation voltage	250 V
Rated surge voltage	6 kV

Input data

Coil side

Nominal input voltage U_N	24 V DC
Input voltage range	19.2 V AC/DC ... 26.4 V AC/DC (20 °C)
Drive and function	monostable
Drive (polarity)	polarized
Typical input current at U_N	9 mA
Typical response time	8 ms
Typical release time	5 ms
Protective circuit	Reverse polarity protection; Polarity protection diode
	Freewheeling diode; Freewheeling diode
Operating voltage display	Yellow LED

Output data

Switching

Contact switching type	1 changeover contact
Type of switch contact	Single contact
Contact material	AgSnO
Maximum switching voltage	250 V AC/DC
Minimum switching voltage	12 V AC/DC
Limiting continuous current	6 A
Maximum inrush current	10 A (4 s)
Min. switching current	10 mA
Interrupting rating (ohmic load) max.	140 W (at 24 V DC)
	20 W (at 48 V DC)
	18 W (at 60 V DC)
	23 W (at 110 V DC)
	40 W (at 220 V DC)
	1500 VA (for 250 V AC)
Switching capacity	2 A (at 24 V, DC13)
	0.2 A (at 110 V, DC13)
	0.1 A (at 220 V, DC13)
	3 A (at 24 V, AC15)
	3 A (at 120 V, AC15)
	3 A (at 230 V, AC15)

Connection data

Connection method	Screw connection
Stripping length	8 mm
Screw thread	M3
Conductor cross-section rigid	0.2 mm² ... 2.5 mm²
Conductor cross-section flexible	0.2 mm² ... 2.5 mm²
Conductor cross-section AWG	24 ... 14
Tightening torque	0.4 Nm ... 0.5 Nm

Dimensions

Item dimensions

Width	6.2 mm
Height	80 mm
Depth	56 mm

Material specifications

Color	green (RAL 6021)

Environmental and real-life conditions

Ambient conditions

Ambient temperature (operation)	-20 °C ... 50 °C
Ambient temperature (storage/transport)	-20 °C ... 70 °C

Standards and regulations

Standards/regulations	IEC 60947-5-1

Mounting

Mounting type	DIN rail mounting
Assembly note	in rows with zero spacing
Mounting position	any

Drawings

Diagram

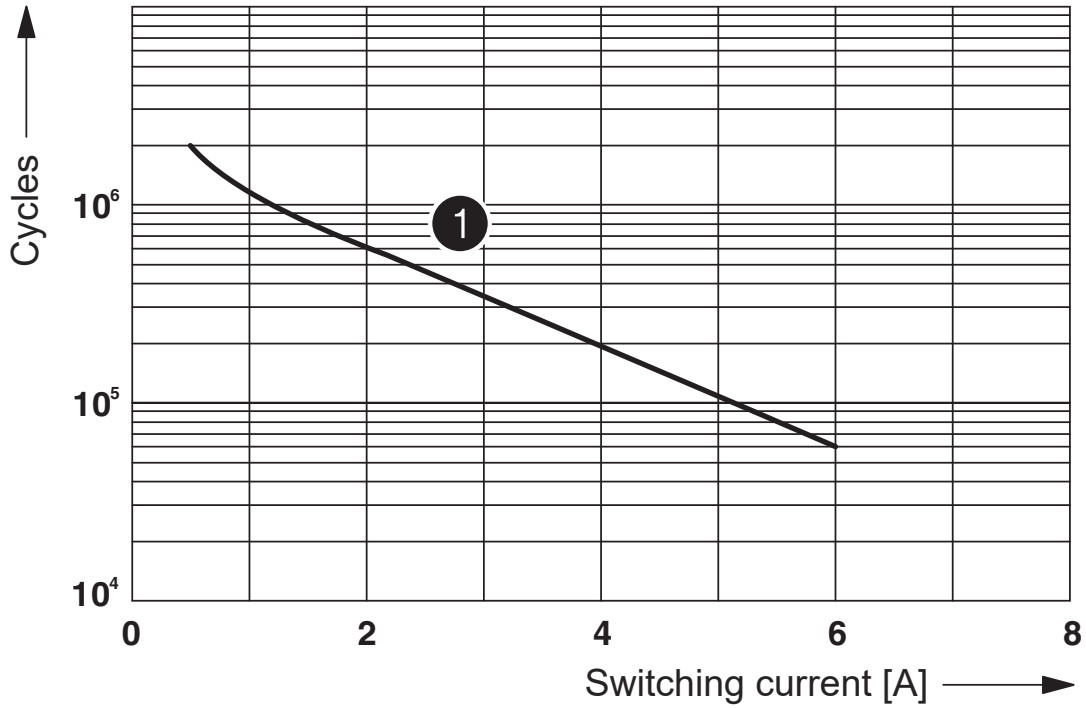

1 250 V AC, ohmic load

Electrical service life

Circuit diagram

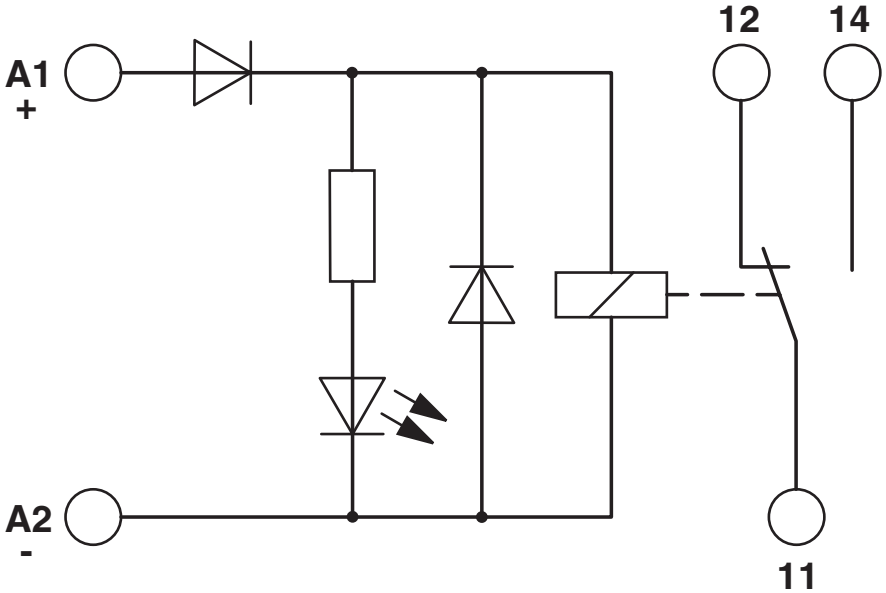

Approvals

To download certificates, visit the product detail page: https://www.phoenixcontact.com/us/products/2964500

cUL Recognized
Approval ID: E238705

UL Recognized
Approval ID: E238705

Classifications

ECLASS

ECLASS-13.0	27371601
ECLASS-15.0	27371601

ETIM

ETIM 10.0	EC001437

UNSPSC

UNSPSC 21.0	39122300

Environmental product compliance

EU RoHS

Fulfills EU RoHS substance requirements	Yes
Exemption	7(a), 7(c)-I

China RoHS

Environment friendly use period (EFUP)	EFUP-50
	An article-related China RoHS declaration table can be found in the download area for the respective article under "Manufacturer declaration". For all articles with EFUP-E, no China RoHS declaration table issued and required.

EU REACH SVHC

REACH candidate substance (CAS No.)	Lead(CAS: 7439-92-1)
SCIP	5018875a-419c-4ba1-b498-0853d42f92f5

Phoenix Contact 2026 © - all rights reserved
https://www.phoenixcontact.com

Phoenix Contact USA
586 Fulling Mill Road
Middletown, PA 17057, United States
(+717) 944-1300
info@phoenixcon.com