DEK-OV- 24DC/ 24DC/ 3/AKT - Solid-state relay terminal block

2964296

https://www.phoenixcontact.com/us/products/2964296

Please be informed that the data shown in this PDF document is generated from our online catalog. Please find the complete data in the user documentation. Our general terms of use for downloads are valid.



Power solid-state relay terminal block for actuator, input: 24 V DC, output: 3 - 30 V DC/3 A, terminal block width: 6.2 mm

Your advantages

- Actuator version available
- EB-DIK insertion bridges
- Labeling and mounting with user-friendly modular terminal blocks
- Wear-free switching of up to 24 V DC/10 A or 240 V AC/800 mA
- Integrated output protective circuit
- Integrated input circuit
- Status indicator
- Zero voltage switch at AC output
- Electrical isolation between input and output at up to 2.5 kVrms

Commercial data

Item number	2964296
Packing unit	10 pc
Minimum order quantity	1 pc
Sales key	C460
Product key	DK61A1
GTIN	4017918104191
Weight per piece (including packing)	22.27 g
Weight per piece (excluding packing)	21.33 g
Customs tariff number	85364190
Country of origin	CN

Technical data

Notes

Note on application	Use of EB 80-DIK... bridges in the DEK terminal blocks: Absorption of humidity from the ambient air as well as an unfavorable tolerance between a larger number of DEK terminal blocks and the EB 80-DIK... bridge may cause (minor) expansion of the DEK housing. When the EB 80-DIK... bridges are used, therefore, it is recommended that these be disconnected after about 10 to 12 DEK terminal blocks and a wire bridge to the next DEK terminal block be inserted in their place.

Product properties

Product type	Solid-state relay module
Product family	DEK
Application	Output function
Operating mode	100% operating factor

Insulation characteristics: Standards/regulations

Insulation	Basic insulation
Overvoltage category	III
Pollution degree	2

Data management status

Date of last data management	01.04.2026

Electrical properties

Maximum power dissipation for nominal condition	0.17 W
Test voltage (Input/output)	2.5 kV AC (Input/output)

Input data

Nominal input voltage U_N	24 V DC
Input voltage range in reference to U_N	0.8 ... 1.2
Input voltage range	19.2 V DC ... 28.8 V DC
Switching threshold "0" signal in reference to U_N	≤ 0.4
Switching threshold "1" signal in reference to U_N	≥ 0.8
Typical input current at U_N	7 mA
Typical response time	40 µs
Typical turn-off time	200 µs
Operating voltage display	Yellow LED
Protective circuit	Reverse polarity protection
Transmission frequency	300 Hz

Output data

Contact switching type	1 N/O contact

Design of digital output	electronic
Output voltage range	3 V DC ... 30 V DC
Limiting continuous current	3 A (see derating curve)
Voltage drop at max. limiting continuous current	≤ 0.2 V
Output circuit	2-conductor, floating
Protective circuit	Reverse polarity protection
	Surge protection

Connection data

Connection method	Screw connection
Stripping length	8 mm
Screw thread	M3
Conductor cross-section rigid	0.2 mm² ... 2.5 mm²
Conductor cross-section flexible	0.2 mm² ... 2.5 mm²
Conductor cross-section AWG	24 ... 14
Tightening torque	0.4 Nm ... 0.5 Nm

Dimensions

Item dimensions

Width	6.2 mm
Height	80 mm
Depth	56 mm

Material specifications

Color	green (RAL 6021)

Environmental and real-life conditions

Ambient conditions

Ambient temperature (operation)	-20 °C ... 60 °C
Ambient temperature (storage/transport)	-20 °C ... 70 °C

Standards and regulations

Standards/regulations

Standards/regulations	IEC 60947-5-1

Mounting

Mounting type	DIN rail mounting
Assembly note	in rows with zero spacing
Mounting position	any

Drawings

Diagram

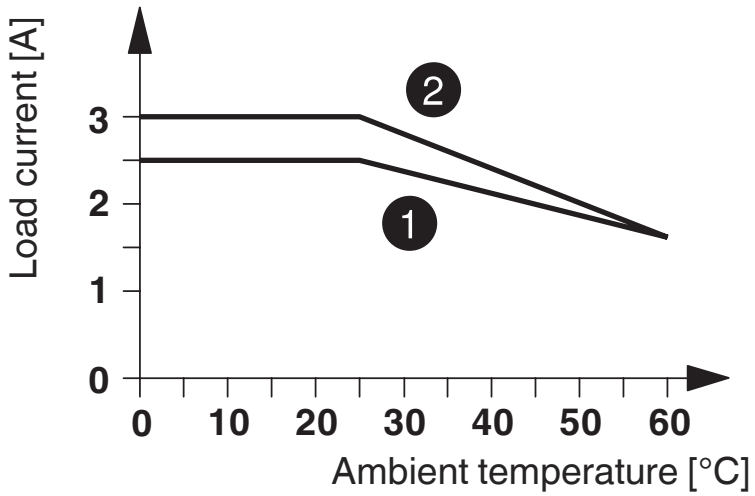

1 Horizontal mounting

2 Vertical mounting

Circuit diagram

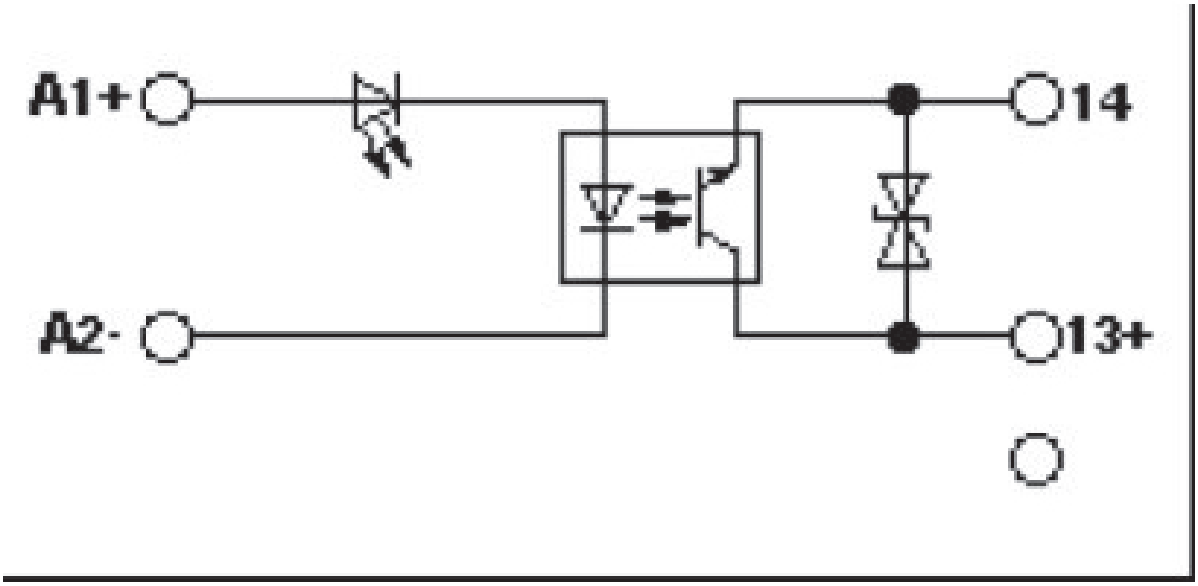

Classifications

ECLASS

ECLASS-13.0	27371604
ECLASS-15.0	27371604

ETIM

ETIM 10.0	EC001504

UNSPSC

UNSPSC 21.0	39122300

Environmental product compliance

EU RoHS

Fulfills EU RoHS substance requirements	Yes
Exemption	7(a), 7(c)-I

China RoHS

Environment friendly use period (EFUP)	EFUP-50
	An article-related China RoHS declaration table can be found in the download area for the respective article under "Manufacturer declaration". For all articles with EFUP-E, no China RoHS declaration table issued and required.

EU REACH SVHC

REACH candidate substance (CAS No.)	Hexahydromethylphthalic anhydride(CAS: n/a)
	Lead(CAS: 7439-92-1)
SCIP	8dfa4aad-40af-4b9d-8f7f-0dc8702eae91

Phoenix Contact 2026 © - all rights reserved
https://www.phoenixcontact.com

Phoenix Contact USA
586 Fulling Mill Road
Middletown, PA 17057, United States
(+717) 944-1300
info@phoenixcon.com