UM 72-SEFE/R - Lateral element

2959353

https://www.phoenixcontact.com/us/products/2959353

Please be informed that the data shown in this PDF document is generated from our online catalog. Please find the complete data in the user documentation. Our general terms of use for downloads are valid.

Side element, right, with foot, width: 5 mm, width: 72 mm, for mounting on NS 32 or NS 35/7.5



Your advantages

- Easy installation
- Flexible size and shape
- Inexpensive as a result of reducing the number of separate housing parts

Commercial data

Item number	2959353
Packing unit	10 pc
Minimum order quantity	10 pc
Sales key	AC13
Product key	ACHDBA
GTIN	4017918104436
Weight per piece (including packing)	6.65 g
Weight per piece (excluding packing)	6.83 g
Customs tariff number	39269097
Country of origin	PL

Technical data

Product properties

Product type	Panel mounting base side part
Housing type	Press-drawn section housings
Housing type	Plug-in module DIN rail-mount base
Housing series	UM
Product family	UM72
Ventilation openings present	no

Dimensions

Dimensional drawing	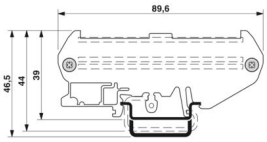
Width	5 mm
Height	89.6 mm
Depth	37.6 mm

Material specifications

Color (Side element)	green (RAL 6021)
Material Lateral element	PA
Flammability rating according to UL 94	V0

Environmental and real-life conditions

Ambient conditions

Max. IP code to attain	IP20
Ambient temperature (operation)	-40 °C ... 105 °C (depending on power dissipation)
Ambient temperature (storage/transport)	-40 °C ... 55 °C
Ambient temperature (assembly)	-5 °C ... 100 °C
Relative humidity (storage/transport)	80 %

PCB data

Number of PCB holders	2

Mounting

Mounting type	DIN rail mounting, screw connection with extruded profile

Drawings

Dimensional drawing

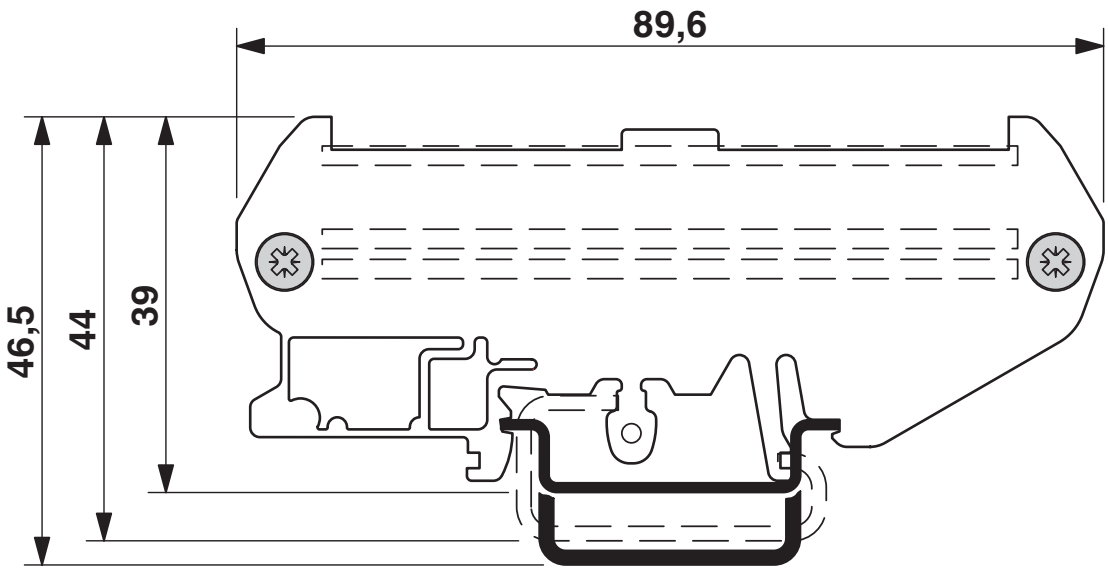

Approvals

To download certificates, visit the product detail page: https://www.phoenixcontact.com/us/products/2959353

UL Recognized
Approval ID: E240868

Classifications

ECLASS

ECLASS-13.0	27190602
ECLASS-15.0	27190602

ETIM

ETIM 10.0	EC002779

UNSPSC

UNSPSC 21.0	31261500

Environmental product compliance

EU RoHS

Fulfills EU RoHS substance requirements	Yes, No exemptions

China RoHS

Environment friendly use period (EFUP)	EFUP-E
	No hazardous substances above the limits

EU REACH SVHC

REACH candidate substance (CAS No.)	No substance above 0.1 wt%

EF3.1 Climate Change

CO2e kg	0.246 kg CO2e

Phoenix Contact 2026 © - all rights reserved
https://www.phoenixcontact.com

Phoenix Contact USA
586 Fulling Mill Road
Middletown, PA 17057, United States
(+717) 944-1300
info@phoenixcon.com