EMG 45-DIO 8E/LP - Diode block

2954798

https://www.phoenixcontact.com/us/products/2954798

Please be informed that the data shown in this PDF document is generated from our online catalog. Please find the complete data in the user documentation. Our general terms of use for downloads are valid.



Lamp test module, 2 diodes with common cathode: with 4 pairs, for individual wiring

Commercial data

Item number	2954798
Packing unit	5 pc
Minimum order quantity	1 pc
Sales key	C440
Product key	DK66M1
GTIN	4017918085131
Weight per piece (including packing)	82.7 g
Weight per piece (excluding packing)	82.7 g
Customs tariff number	85411000
Country of origin	DE

Technical data

Product properties

Product type	Lamp testing module

Insulation characteristics

Pollution degree	2

Input data

Diode

Description of the input	8 diodes, groups of 2 diodes with common cathode: Version: with 4 pairs, for individual loads
Diode type	1 N 4007
Max. operating voltage U_{max}	250 V AC
Peak reverse voltage per diode	1300 V
Reverse current per diode	≤ 5 µA
Conducting state voltage per diode	approx. 0.8 V
Conducting state current per diode	0.7 A (with single load)
	0.4 A (with simultaneous loads)

Connection data

Connection method	Screw connection
Stripping length	8 mm
Screw thread	M3
Conductor cross-section rigid	0.2 mm² ... 4 mm²
Conductor cross-section flexible	0.2 mm² ... 2.5 mm²
Conductor cross-section AWG	24 ... 12

Dimensions

Width	45 mm
Height	75 mm
Depth	55 mm

Material specifications

Color	green (RAL 6021)

Environmental and real-life conditions

Ambient conditions

Ambient temperature (operation)	-20 °C ... 50 °C
Ambient temperature (storage/transport)	-40 °C ... 70 °C

Approvals

CE

Certificate	CE-compliant
Note	and EN 61326

Standards and regulations

Standards/regulations	DIN EN 50178

Mounting

Mounting type	DIN rail mounting
Assembly note	in rows with zero spacing
Mounting position	any

Drawings

Circuit diagram

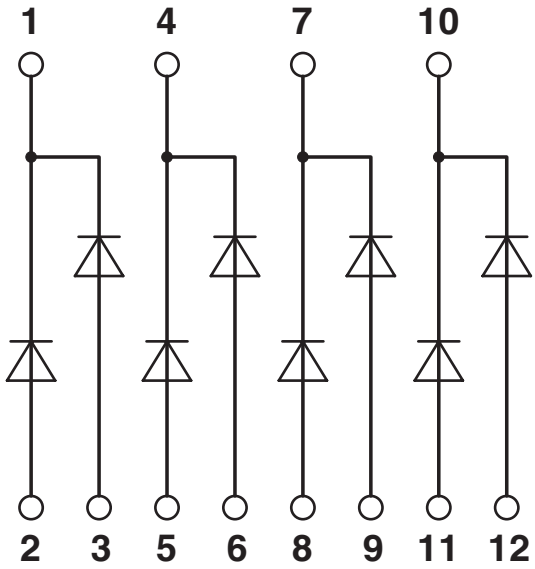

Approvals

To download certificates, visit the product detail page: https://www.phoenixcontact.com/us/products/2954798

EAC
Approval ID: RU*DE*08.B.01841/19

Classifications

ECLASS

ECLASS-13.0	27371010
ECLASS-15.0	27371010

ETIM

ETIM 10.0	EC002878

UNSPSC

UNSPSC 21.0	32151500

Environmental product compliance

EU RoHS

Fulfills EU RoHS substance requirements	Yes
Exemption	7(a), 7(c)-I

China RoHS

Environment friendly use period (EFUP)	EFUP-50
	An article-related China RoHS declaration table can be found in the download area for the respective article under "Manufacturer declaration". For all articles with EFUP-E, no China RoHS declaration table issued and required.

EU REACH SVHC

REACH candidate substance (CAS No.)	Lead(CAS: 7439-92-1)
SCIP	83ae160f-893d-4ecc-9b8f-0ad1a8a19494

EF3.1 Climate Change

CO2e kg	1.284 kg CO2e

Phoenix Contact 2026 © - all rights reserved
https://www.phoenixcontact.com

Phoenix Contact USA
586 Fulling Mill Road
Middletown, PA 17057, United States
(+717) 944-1300
info@phoenixcon.com