EMG 17-OV- 24DC/ 60DC/3 - Solid-state relay module

2954154

https://www.phoenixcontact.com/us/products/2954154

Please be informed that the data shown in this PDF document is generated from our online catalog. Please find the complete data in the user documentation. Our general terms of use for downloads are valid.



Power solid-state relay, with LED and protective circuit in input and output circuits, input: 24 V DC, output: 12 - 60 V DC/max. 3 A

Commercial data

Item number	2954154
Packing unit	10 pc
Minimum order quantity	1 pc
Sales key	C460
Product key	DK61C1
GTIN	4017918084813
Weight per piece (including packing)	87.1 g
Weight per piece (excluding packing)	86.95 g
Customs tariff number	85364190
Country of origin	DE

Technical data

Notes

Utilization restriction

EMC note	EMC: class A product, see manufacturer's declaration in the download area

Product properties

Product type	Solid-state relay module
Application	Output function
Operating mode	100% operating factor

Insulation characteristics

Insulation	Basic insulation

Data management status

Date of last data management	15.04.2026

Electrical properties

Maximum power dissipation for nominal condition	0.17 W
Test voltage (Input/output)	3.5 kV AC (Input/output)

Input data

Nominal input voltage U_N	24 V DC
Input voltage range in reference to U_N	0.8 ... 1.2
Input voltage range	19.2 V DC ... 28.8 V DC
Switching threshold "0" signal in reference to U_N	≤ 0.4
Switching threshold "1" signal in reference to U_N	≥ 0.8
Typical input current at U_N	7 mA
Typical response time	20 µs
Typical turn-off time	200 µs
Status display	LED (yellow)
Protective circuit	Reverse polarity protection; Polarity protection diode
	Surge protection
Transmission frequency	500 Hz

Output data

Contact switching type	1 N/O contact
Design of digital output	electronic
Output nominal voltage	60 V DC
Output voltage range	12 V DC ... 60 V DC
Limiting continuous current	3 A (see derating curve)
Peak offstate voltage	60 V DC
Voltage drop at max. limiting continuous current	1.2 V

Output circuit	2-conductor, floating
Protective circuit	Reverse polarity protection; Polarity protection diode
	Surge protection

Connection data

Input side

Connection method	Screw connection
Stripping length	8 mm
Screw thread	M3
Conductor cross-section rigid	0.2 mm² ... 4 mm²
Conductor cross-section flexible	0.2 mm² ... 2.5 mm²
Conductor cross-section AWG	24 ... 12
Tightening torque	0.5 Nm ... 0.6 Nm

Output side

Connection method	Screw connection
Stripping length	8 mm
Screw thread	M3
Conductor cross-section rigid	0.2 mm² ... 4 mm²
Conductor cross-section flexible	0.2 mm² ... 2.5 mm²
Conductor cross-section AWG	24 ... 12
Tightening torque	0.5 Nm ... 0.6 Nm

Dimensions

Item dimensions

Width	17.5 mm
Height	75 mm
Depth	102 mm

Material specifications

Color	green (RAL 6021)
Flammability rating according to UL 94	V0

Environmental and real-life conditions

Ambient conditions

Degree of protection	IP20
Ambient temperature (operation)	-20 °C ... 60 °C
Ambient temperature (storage/transport)	-20 °C ... 70 °C

Standards and regulations

Standards/regulations	IEC 60664
	EN 50178

Mounting

Mounting type	DIN rail mounting
Assembly note	in rows with zero spacing
Mounting position	any

Drawings

Diagram

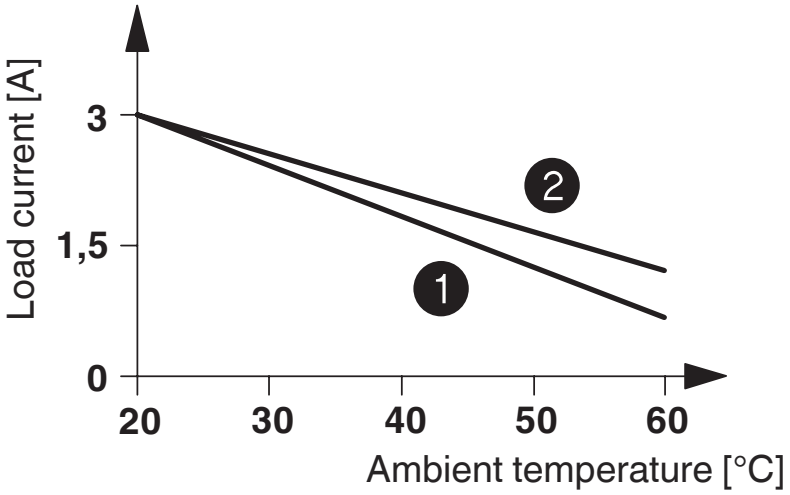

1 In rows with zero spacing
2 stand-alone device

Circuit diagram

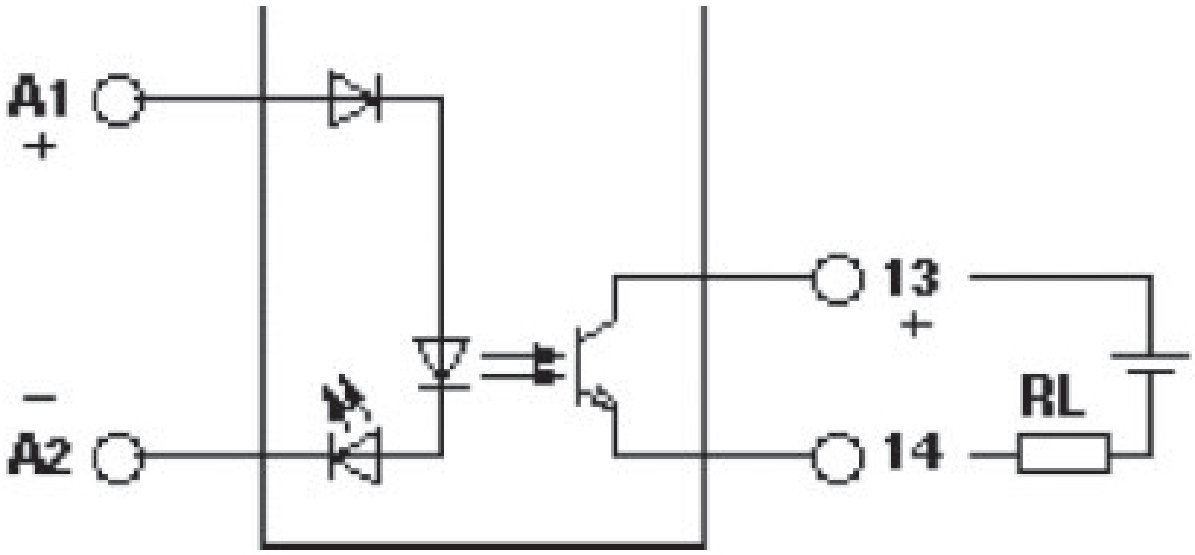

Circuit diagram

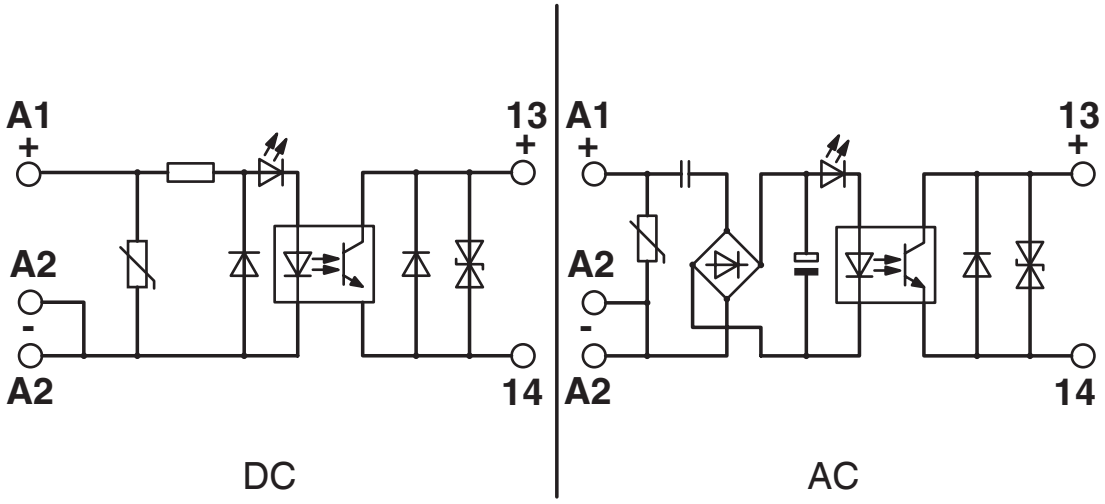

Classifications

ECLASS

ECLASS-13.0	27371604
ECLASS-15.0	27371604

ETIM

ETIM 10.0	EC001504

UNSPSC

UNSPSC 21.0	39122300

Environmental product compliance

EU RoHS

Fulfills EU RoHS substance requirements	Yes
Exemption	6(c), 7(a), 7(c)-I

China RoHS

Environment friendly use period (EFUP)	EFUP-50
	An article-related China RoHS declaration table can be found in the download area for the respective article under "Manufacturer declaration". For all articles with EFUP-E, no China RoHS declaration table issued and required.

EU REACH SVHC

REACH candidate substance (CAS No.)	Hexahydromethylphthalic anhydride(CAS: n/a)
	Lead(CAS: 7439-92-1)
SCIP	59d2c460-9cc2-4970-9071-65ea3abb5f02

EF3.1 Climate Change

CO2e kg	0.406 kg CO2e

Phoenix Contact 2026 © - all rights reserved
https://www.phoenixcontact.com

Phoenix Contact USA
586 Fulling Mill Road
Middletown, PA 17057, United States
(+717) 944-1300
info@phoenixcon.com