EMG 12-TR/INV - Switching amplifier

2943437

https://www.phoenixcontact.com/us/products/2943437

Please be informed that the data shown in this PDF document is generated from our online catalog. Please find the complete data in the user documentation. Our general terms of use for downloads are valid.



Inverter module. The inverter module inverts the signals of ground switching n-p-n transistor outputs into plus switching p-n-p outputs, and vice versa.

Commercial data

Item number	2943437
Packing unit	10 pc
Minimum order quantity	1 pc
Sales key	C460
Product key	DK61C3
GTIN	4017918081089
Weight per piece (including packing)	30.65 g
Weight per piece (excluding packing)	30.96 g
Customs tariff number	85365019
Country of origin	DE

Technical data

Product properties

Product type	Solid-state relay module

Insulation characteristics

Overvoltage category	II
Pollution degree	2

Electrical properties

Supply

Supply voltage range	20 V DC ... 30 V DC (U_V)

Input data

NPN

Switching threshold "1" signal voltage	< 7 V (at U_V = 24 V; < (U_V - 17 V))
Switching threshold "0" signal, voltage	> 15 V (at U_V = 24 V; > (U_V - 9 V))
Min. voltage input signal	-2 V
Max. voltage input signal	26 V (at U_V = 24 V; U_V + 2 V)

PNP

Switching threshold "1" signal voltage	> 17 V
Switching threshold "0" signal, voltage	< 9 V
Min. voltage input signal	-2 V
Max. voltage input signal	26 V (at U_V = 24 V; U_V + 2 V)

Output data

Continuous load current	200 mA
Leakage current	< 1 mA
Residual voltage	< 1 V
Transmission frequency	15 kHz

Connection data

Connection method	Screw connection
Stripping length	8 mm
Screw thread	M3
Conductor cross-section rigid	0.2 mm² ... 4 mm²
Conductor cross-section flexible	0.2 mm² ... 2.5 mm²
Conductor cross-section AWG	24 ... 12
Tightening torque	0.5 Nm ... 0.6 Nm

Dimensions

Width	12.5 mm
Height	75 mm

Depth	55 mm

Material specifications

Color	green (RAL 6021)

Environmental and real-life conditions

Ambient conditions

Ambient temperature (operation)	0 °C ... 55 °C

Standards and regulations

Standards/regulations	IEC 664
	IEC 664 A
	DIN VDE 0110-1

Mounting

Mounting type	DIN rail mounting
Mounting position	any

Drawings

Application drawing

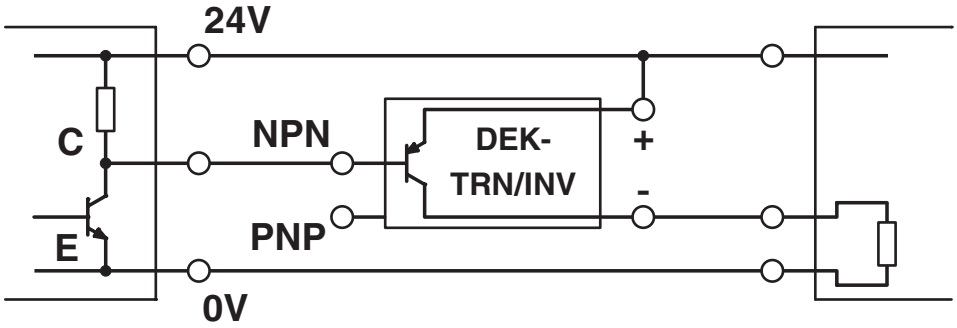

a = NPN output
b = load

Application drawing

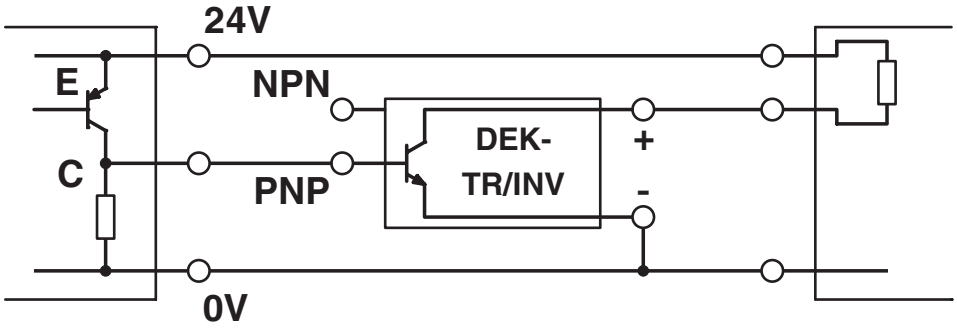

Circuit diagram

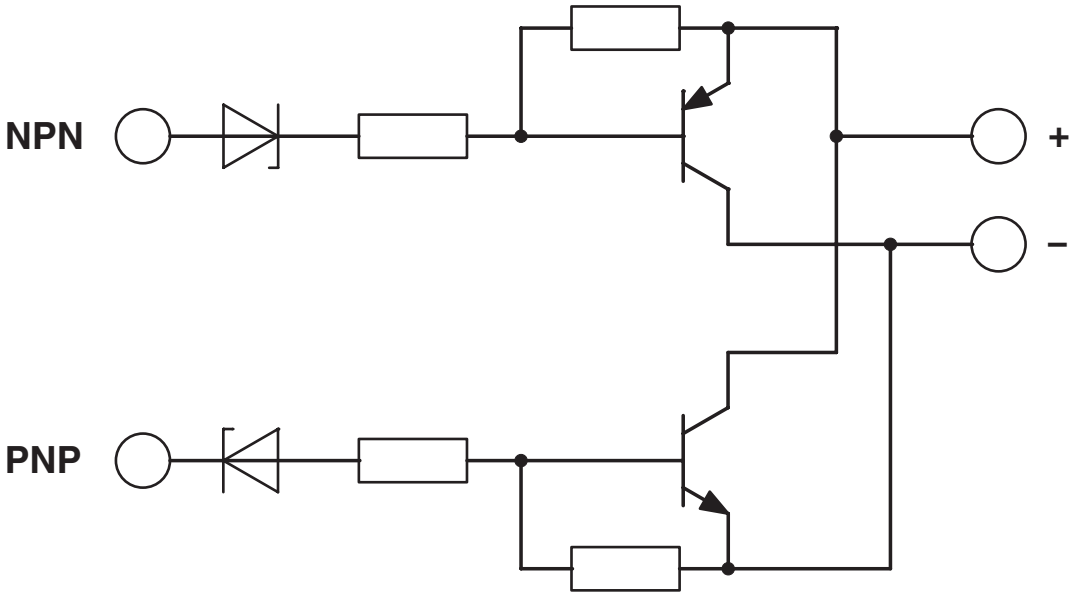

Classifications

ECLASS

ECLASS-13.0	27371604
ECLASS-15.0	27371604

ETIM

ETIM 10.0	EC001504

UNSPSC

UNSPSC 21.0	39122300

Environmental product compliance

EU RoHS

Fulfills EU RoHS substance requirements	Yes
Exemption	6(c), 7(c)-I

China RoHS

Environment friendly use period (EFUP)	EFUP-50
	An article-related China RoHS declaration table can be found in the download area for the respective article under "Manufacturer declaration". For all articles with EFUP-E, no China RoHS declaration table issued and required.

EU REACH SVHC

REACH candidate substance (CAS No.)	Lead(CAS: 7439-92-1)
SCIP	968e3bee-5809-4854-bb3b-763a0336fd7d

EF3.1 Climate Change

CO2e kg	0.602 kg CO2e

Phoenix Contact 2026 © - all rights reserved
https://www.phoenixcontact.com

Phoenix Contact USA
586 Fulling Mill Road
Middletown, PA 17057, United States
(+717) 944-1300
info@phoenixcon.com