EMG 10-REL/KSR-G 24/ 1-LC - Relay module

2942108

https://www.phoenixcontact.com/us/products/2942108

Please be informed that the data shown in this PDF document is generated from our online catalog. Please find the complete data in the user documentation. Our general terms of use for downloads are valid.



Relay module, with soldered-in miniature switching relay, contacts (AgNi): Medium to large loads, 1 N/O contact, input voltage 24 V DC

Your advantages

- Integrated input circuit and interference suppression circuit

Commercial data

Item number	2942108
Packing unit	10 pc
Minimum order quantity	1 pc
Sales key	C460
Product key	DK61C2
GTIN	4017918080594
Weight per piece (including packing)	36.05 g
Weight per piece (excluding packing)	36.05 g
Customs tariff number	85364190
Country of origin	DE

Technical data

Notes

Utilization restriction

EMC note	EMC: class A product, see manufacturer's declaration in the download area

Product properties

Product type	Relay Module
Product family	EMG
Application	Universal
Operating mode	100% operating factor
Mechanical service life	approx. 2x 10^7 cycles

Insulation characteristics

Insulation	Basic insulation
Overvoltage category	III
Pollution degree	2

Data management status

Date of last data management	01.04.2026

Electrical properties

Maximum power dissipation for nominal condition	0.5 W
Test voltage (Winding/contact)	4 kV AC (50 Hz, 1 min., winding/contact)
Rated insulation voltage	260 V AC
Rated surge voltage	4 kV

Input data

Coil side

Nominal input voltage U_N	24 V DC
Input voltage range	19.2 V DC ... 26.4 V DC (20 °C)
Drive and function	monostable
Drive (polarity)	polarized
Typical input current at U_N	21 mA
Typical response time	7 ms
Typical release time	11 ms
Protective circuit	Reverse polarity protection; Polarity protection diode
	Freewheeling diode; Freewheeling diode
Operating voltage display	Yellow LED

Output data

Switching

Contact switching type	1 N/O contact
Type of switch contact	Single contact
Contact material	AgNi
Maximum switching voltage	250 V AC/DC
Minimum switching voltage	12 V
Limiting continuous current	6 A
Maximum inrush current	8 A
Min. switching current	100 mA
Interrupting rating (ohmic load) max.	140 W (at 24 V DC)
	60 W (at 48 V DC)
	45 W (at 60 V DC)
	35 W (at 110 V DC)
	55 W (at 220 V DC)
	1500 VA (for 250 V AC)

Connection data

Coil side

Connection method	Screw connection
Stripping length	8 mm
Screw thread	M3
Conductor cross-section rigid	0.2 mm² ... 4 mm²
Conductor cross-section flexible	0.2 mm² ... 2.5 mm²
Conductor cross-section AWG	24 ... 12
Tightening torque	0.5 Nm ... 0.6 Nm

Contact side

Connection method	Screw connection
Stripping length	8 mm
Screw thread	M3
Conductor cross-section rigid	0.2 mm² ... 4 mm²
Conductor cross-section flexible	0.2 mm² ... 2.5 mm²
Conductor cross-section AWG	24 ... 12

Dimensions

Item dimensions

Width	10.6 mm
Height	75 mm
Depth	53.5 mm

Material specifications

Color	green (RAL 6021)

Environmental and real-life conditions

Ambient conditions

Degree of protection	IP20
Ambient temperature (operation)	-20 °C ... 40 °C
Ambient temperature (storage/transport)	-20 °C ... 70 °C

Standards and regulations

Standards/regulations	IEC 60664
	EN 50178

Mounting

Mounting type	DIN rail mounting
Assembly note	in rows with zero spacing
Mounting position	any

Drawings

Connection diagram

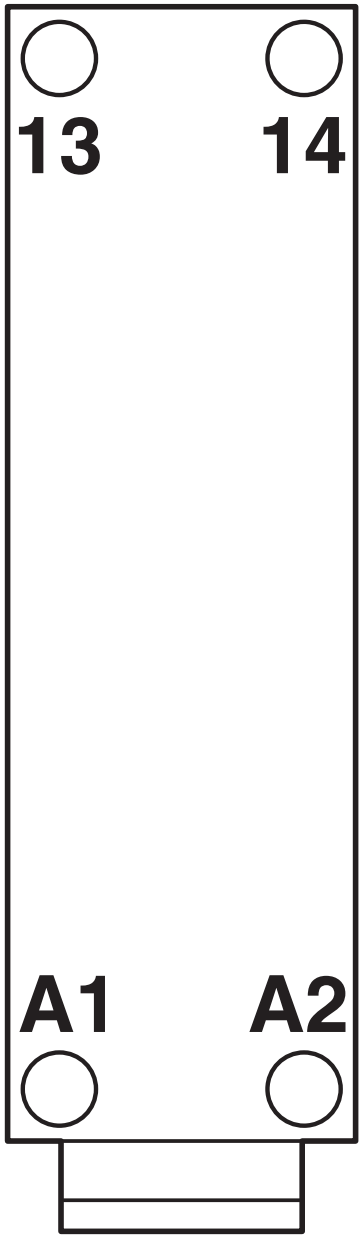

Circuit diagram

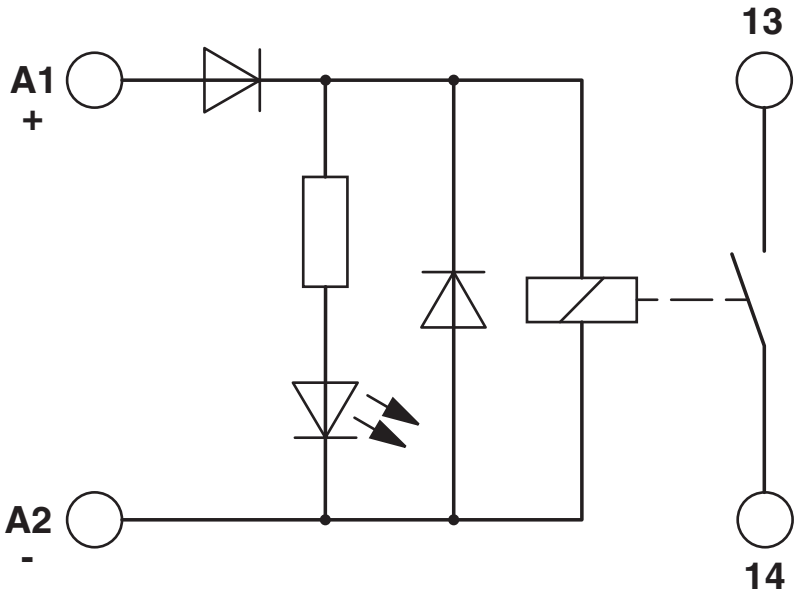

Circuit diagram

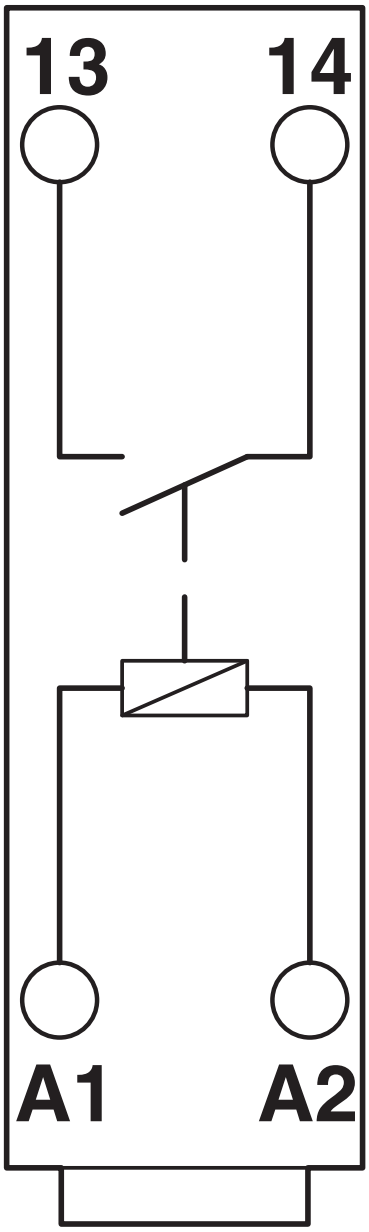

Approvals

To download certificates, visit the product detail page: https://www.phoenixcontact.com/us/products/2942108

cUL Recognized
Approval ID: E238705

UL Recognized
Approval ID: E238705

Classifications

ECLASS

ECLASS-13.0	27371601
ECLASS-15.0	27371601

ETIM

ETIM 10.0	EC001437

UNSPSC

UNSPSC 21.0	39122300

Environmental product compliance

EU RoHS

Fulfills EU RoHS substance requirements	Yes
Exemption	6(c), 7(a), 7(c)-I

China RoHS

Environment friendly use period (EFUP)	EFUP-50
	An article-related China RoHS declaration table can be found in the download area for the respective article under "Manufacturer declaration". For all articles with EFUP-E, no China RoHS declaration table issued and required.

EU REACH SVHC

REACH candidate substance (CAS No.)	Lead(CAS: 7439-92-1)
SCIP	45ada63a-009a-4d74-8b93-d253f91f6ec1

EF3.1 Climate Change

CO2e kg	0.2 kg CO2e

Phoenix Contact 2026 © - all rights reserved
https://www.phoenixcontact.com

Phoenix Contact USA
586 Fulling Mill Road
Middletown, PA 17057, United States
(+717) 944-1300
info@phoenixcon.com