UNO2-PS/1AC/24DC/480W - Power supply

2910105

https://www.phoenixcontact.com/us/products/2910105

Please be informed that the data shown in this PDF document is generated from our online catalog. Please find the complete data in the user documentation. Our general terms of use for downloads are valid.



Primary-switched power supply unit UNO POWER, Screw connection, DIN rail mounting, input: 1-phase, output: 24 V DC / 20 A, adjustable from 24 V DC ... 28 V DC

Product description

UNO POWER power supplies with basic functionality.
Thanks to their high power density, compact UNO POWER power supplies offer the ideal solution for loads up to 960 W, particularly in compact control boxes. The power supply units are available in various performance classes and overall widths. Their high degree of efficiency and low idling losses ensure a high level of energy efficiency.

Your advantages

- Save space in the control cabinet, thanks to an extremely narrow overall width of just 59 mm
- Save energy, thanks to a high degree of efficiency
- Outdoor installation possible, with a wide temperature range of -25°C … +70°C
- Simple output voltage monitoring, thanks to the floating DC OK relay contact

ELEKTROGERÄTE RÜCKNAHME

Commercial data

Item number	2910105
Packing unit	1 pc
Minimum order quantity	1 pc
Sales key	CM15
Product key	CMPV13
GTIN	4055626456652
Weight per piece (including packing)	1,261 g
Weight per piece (excluding packing)	1,084 g

Customs tariff number	85044095
Country of origin	TH

Technical data

Input data

AC operation

Supply system configuration	Star network (TN, TT, IT (PE))
Nominal input voltage range	100 V AC ... 240 V AC
Input voltage range	100 V AC ... 240 V AC -15 % ... +10 %
Derating	< 90 V AC (1 %/V)
Typical national grid voltage	120 V AC
	230 V AC
Voltage type of supply voltage	AC
Inrush current	typ. 15 A (at 25 °C)
Inrush current integral (I^2t)	< 1 A^2s
Frequency range (f_N)	50 Hz ... 60 Hz ±10 %
Mains buffering time	typ. 17 ms (120 V AC)
	typ. 18 ms (230 V AC)
Current consumption	5.4 A (100 V AC)
	4.4 A (120 V AC)
	2.3 A (230 V AC)
	2.2 A (240 V AC)
Nominal power consumption	533 VA
Protective circuit	Transient surge protection; Varistor, gas-filled surge arrester
Switch-on time	typ. 1 s
Device mains fuse	8 A internal (device protection), fast-blow
Recommended breaker for input protection	10 A ... 20 A (Characteristic B, C, D, K or comparable)
Discharge current to PE	< 3.5 mA

Output data

Efficiency	typ. 93 % (120 V AC)
	typ. 94.6 % (230 V AC)
Nominal output voltage	24 V DC
Setting range of the output voltage (U_{Set})	24 V DC ... 28 V DC (> 24 V DC, constant capacity restricted)
Nominal output current (I_N)	20 A
Short-circuit-proof	yes
No-load proof	yes
Derating	55 °C ... 70 °C
Crest factor	typ. 1.667 (120 V AC)
	typ. 1.75 (230 V AC)
Output power (P_N)	480 W
Connection in parallel	yes, for redundancy
Connection in series	yes, for increased output voltage
Feedback voltage resistance	≤ 35 V DC
Protection against overvoltage at the output (OVP)	≤ 35 V DC

Residual ripple	typ. 70 mV_{PP} (with nominal values)
Control deviation	< 1 % (change in load, static 10 % ... 90 %)
	< 3 % (change in load, dynamic 10 % ... 90 %)
	< 0.1 % (change in input voltage ±10 %)
Rise time	< 1 s (U_{Out} = 10 % ... 90 %)
Minimum no-load power dissipation	< 2.9 W (120 V AC)
Maximum no-load power dissipation	< 3 W (230 V AC)
Minimum nominal load power dissipation	< 37 W (120 V AC)
Power loss nominal load max.	< 28 W (230 V AC)
Integrated fuse protection	no
Fuse protection (secondary side)	electronic
	thermal-magnetic
	thermal

Connection data

Input

Position	1.x
Identification	1.1 (L), 1.3 (N)

Conductor connection

Connection method	Screw connection
rigid	0.2 mm² ... 6 mm²
flexible	0.2 mm² ... 4 mm²
flexible with ferrule without plastic sleeve	0.25 mm² ... 4 mm²
flexible with ferrule with plastic sleeve	0.25 mm² ... 4 mm²
rigid (AWG)	24 ... 10 (Cu)
AWG	24 ... 10 (Cu)
Stripping length	8 mm
Tightening torque (EU)	0.5 Nm ... 0.6 Nm
Tightening torque ()	4 lb_f-in. ... 5 lb_f-in.
Drive form screw head	Slotted L
Screwdriver blade	0.6 x 3.5 mm

Output

Position	2.x
Identification	2.1, 2.2 (+), 2.3, 2.4 (-)

Conductor connection

Connection method	Screw connection
rigid	0.2 mm² ... 6 mm²
flexible	0.2 mm² ... 4 mm²
flexible with ferrule without plastic sleeve	0.25 mm² ... 4 mm²
flexible with ferrule with plastic sleeve	0.25 mm² ... 4 mm²
rigid (AWG)	24 ... 10 (Cu)
AWG	24 ... 10 (Cu)

Stripping length	8 mm
Tightening torque (EU)	0.5 Nm ... 0.6 Nm
Tightening torque ()	4 lb_f-in. ... 5 lb_f-in.
Drive form screw head	Slotted L
Screwdriver blade	0.6 x 3.5 mm

Signal

Position	3.x
Identification	3.1 (13), 3.2 (14)

Conductor connection

Connection method	Screw connection
rigid	0.2 mm² ... 6 mm²
flexible	0.2 mm² ... 4 mm²
flexible with ferrule without plastic sleeve	0.25 mm² ... 4 mm²
flexible with ferrule with plastic sleeve	0.25 mm² ... 4 mm²
AWG	24 ... 10 (Cu)
Stripping length	8 mm
Tightening torque (EU)	0.5 Nm ... 0.6 Nm
Tightening torque ()	4 lb_f-in. ... 5 lb_f-in.
Drive form screw head	Slotted L
Screwdriver blade	0.6 x 3.5 mm

Signaling

LED signaling

Types of signaling	LED DC OK - signal state operation (U_N = 24 V DC, I_{Out} = I_N)
Function	Visual operating state display
Color	green
LED off	Supply voltage input AC not present (Off)
LED on (green), DC OK	U_{OUT} > 0,9 x U_N (On (green), DC OK)
LED on (flashing green) DC OK < 0.9 x UN	U_{OUT} < 0,9 x U_N (on (flashing green))

Signal output Relay 13/14

Position	3.x
Type of signaling	DC OK switch contact - signal state operation (U_N = 24 V DC, I_{Out} = I_N)
Position marking	3.1 (13), 3.2 (14)
Function	Operating state forwarding
Switch contact (floating)	OptoMOS
Switching voltage	max. 30 V AC/DC
	max. 60 V DC
Current carrying capacity	max. 50 mA
State condition (Contact closed)	U_{OUT} > 0,9 x U_N (Contact closed)
State condition (Contact open)	U_{OUT} < 0,9 x U_N (Contact open)

Electrical properties

Number of phases	1
Insulation voltage input/output	4 kV AC (type test)
	3 kV AC (routine test)
Insulation voltage input / PE	3.5 kV AC (type test)
	2.4 kV AC (routine test)

Product properties

Product type	Power supply
Product family	UNO POWER
MTBF (IEC 61709, SN 29500)	> 900000 h (25 °C)
	> 530000 h (40 °C)
	> 280000 h (55 °C)
Environmental protection directive	RoHS Directive 2011/65/EU
	WEEE
	Reach

Insulation characteristics

Protection class	I
Overvoltage category (EN 61010-1)	II (≤ 3000 m)
Overvoltage category (EN 62477-1)	III (≤ 3000 m)
Degree of pollution	2

Life expectancy (electrolytic capacitors)

Temperature	40 °C
Additional text	120 V AC

Life expectancy (electrolytic capacitors)

Temperature	40 °C
Additional text	230 V AC

Life expectancy (electrolytic capacitors)

Temperature	40 °C
Additional text	120 V AC

Life expectancy (electrolytic capacitors)

Temperature	40 °C
Additional text	230 V AC

Life expectancy (electrolytic capacitors)

Temperature	40 °C
Additional text	120 V AC

Life expectancy (electrolytic capacitors)

Temperature	40 °C
Additional text	230 V AC

Life expectancy (electrolytic capacitors)

Temperature	25 °C
Additional text	120 V AC

Life expectancy (electrolytic capacitors)

Temperature	25 °C
Additional text	230 V AC

Dimensions

Item dimensions

Width	59 mm
Height	130 mm
Depth	129 mm
Depth (Device depth (DIN rail mounting))	125 mm (Device depth (DIN rail mounting))

Installation dimensions

Installation distance right/left (active, passive)	0 mm / 0 mm
Installation distance top/bottom (active, passive)	30 mm / 30 mm

Mounting

Mounting type	DIN rail mounting
Assembly note	alignable: 0 mm horizontally, 30 mm vertically
Mounting position	horizontal DIN rail NS 35, EN 60715
With protective coating	no

Material specifications

Flammability rating according to UL 94	V0 (Housing, terminal blocks)
Housing material	Metal
Housing material	Aluminum (AlMg3) / sheet steel, zinc-plated
Hood version	Stainless steel
Side element version	Aluminum
Foot latch material	Sheet steel, zinc-plated

Environmental and real-life conditions

Ambient conditions

Degree of protection	IP20
Ambient temperature (operation)	-25 °C ... 70 °C (> 55 °C Derating: 2.5 %/K)
Ambient temperature (storage/transport)	-40 °C ... 85 °C
Ambient temperature (start-up type tested)	-40 °C
Maximum altitude	≤ 3000 m (> 2000 m, Derating: 10 %/1000 m)
Climatic class	3K22 (in accordance with EN 60721)
Max. permissible relative humidity (operation)	≤ 95 % (at 25 °C, non-condensing)
Shock (operation)	18 ms, 30g, per spatial direction (IEC 60068-2-27)
Vibration (operation)	10 Hz ... 50 Hz, amplitude ±0.2 mm (IEC 60068-2-6)

	50 Hz ... 150 Hz, 2.3g, 90 min.
Temp code	T4 (-25°C ... +70°C; >55°C, derating: 2.5 %/K)

Standards and regulations

Safety of power supply units up to 1100 V (insulation distances)

Standard designation	Safety of power supply units up to 1100 V (insulation distances)
Standards/specifications	DIN EN 61558-2-16

Electrical safety

Standard designation	Electrical safety
Standards/specifications	IEC 61010-2-201 (SELV)

Safety for measurement, control, and laboratory equipment

Standard designation	Safety for equipment for measurement, control, and laboratory use
Standards/specifications	IEC 61010-1

Protective extra-low voltage

Standard designation	Protective extra-low voltage
Standards/specifications	IEC 61010-1 (SELV)
	IEC 61010-2-201 (PELV)

Safe isolation

Standard designation	Safe isolation
Standards/specifications	IEC 61558-2-16
	IEC 61010-2-201

Limitation of harmonic line currents

Standard designation	Limitation of harmonic line currents
Standards/specifications	EN 61000-3-2

Mains voltage dips

Standard designation	Requirement of the semiconductor industry with regard to mains voltage dips
Standards/specifications	SEMI F47 - 0706 (180 V AC)

Approvals

UL

Identification	UL/C-UL Listed UL 61010-1

UL

Identification	UL/C-UL Listed UL 61010-2-201

UL

Identification	UL/C-UL Listed ANSI/UL 121201 Class I, Division 2, Groups A, B, C, D (Hazardous Location)

SIQ

Identification	CB scheme (IEC 61010-1, IEC 61010-2-201)

EMC data

Electromagnetic compatibility	Conformance with EMC Directive 2014/30/EU
Low Voltage Directive	Conformance with Low Voltage Directive 2014/35/EC
Interference emission	Interference emission in accordance with EN 61000-6-3 (residential and commercial) and EN 61000-6-4 (industrial)
EMC requirements for noise immunity	EN 61000-6-2

Conducted noise emission

Standards/regulations	EN 55016
	EN 61000-6-3 (Class B)

Noise emission

Standards/regulations	EN 55016
	EN 61000-6-3 (Class B)

Harmonic currents

Standards/regulations	EN 61000-3-2
	EN 61000-3-2 (Class A)
Frequency range	0 kHz ... 2 kHz

Flicker

Standards/regulations	EN 61000-3-3
Frequency range	0 kHz ... 2 kHz

Electrostatic discharge

Standards/regulations	EN 61000-4-2

Electrostatic discharge

Contact discharge	6 kV (Test Level 3)
Discharge in air	8 kV (Test Level 3)
Comments	Criterion A

Electromagnetic HF field

Standards/regulations	EN 61000-4-3

Electromagnetic HF field

Frequency range	80 MHz ... 1 GHz
Test field strength	10 V/m (Test Level 3)
Frequency range	1 GHz ... 6 GHz
Test field strength	10 V/m (Test Level 3)
Comments	Criterion A

Fast transients (burst)

Standards/regulations	EN 61000-4-4

Fast transients (burst)

Input	4 kV (Test Level 4 - asymmetrical)

Output	2 kV (Test Level 3 - asymmetrical)
Comments	Criterion A

Surge voltage load (surge)

Standards/regulations	EN 61000-4-5

Surge voltage load (surge)

Input	2 kV (Test Level 4 - symmetrical)
	4 kV (Test Level 4 - asymmetrical)
Output	1 kV (Test Level 3 - symmetrical)
	2 kV (Test Level 3 - asymmetrical)
Comments	Criterion A

Conducted interference

Standards/regulations	EN 61000-4-6

Conducted interference

Input/Output	asymmetrical
Frequency range	0.15 MHz ... 80 MHz
Comments	Criterion A
Voltage	10 V (Test Level 3)

Voltage dips

Standards/regulations	EN 61000-4-11
Voltage	230 V AC
Frequency	50 Hz
Voltage dip	70 %
Number of periods	25 / 30 periods
Comments	Criterion A
Voltage dip	40 %
Number of periods	12 periods
Additional text	Test Level 2
Comments	Criterion A
Voltage dip	0 %
Number of periods	1 period
Additional text	Test Level 2
Comments	Criterion B

Criteria

Criterion A	Normal operating behavior within the specified limits.
Criterion B	Temporary impairment to operational behavior that is corrected by the device itself.

Drawings

Dimensional drawing

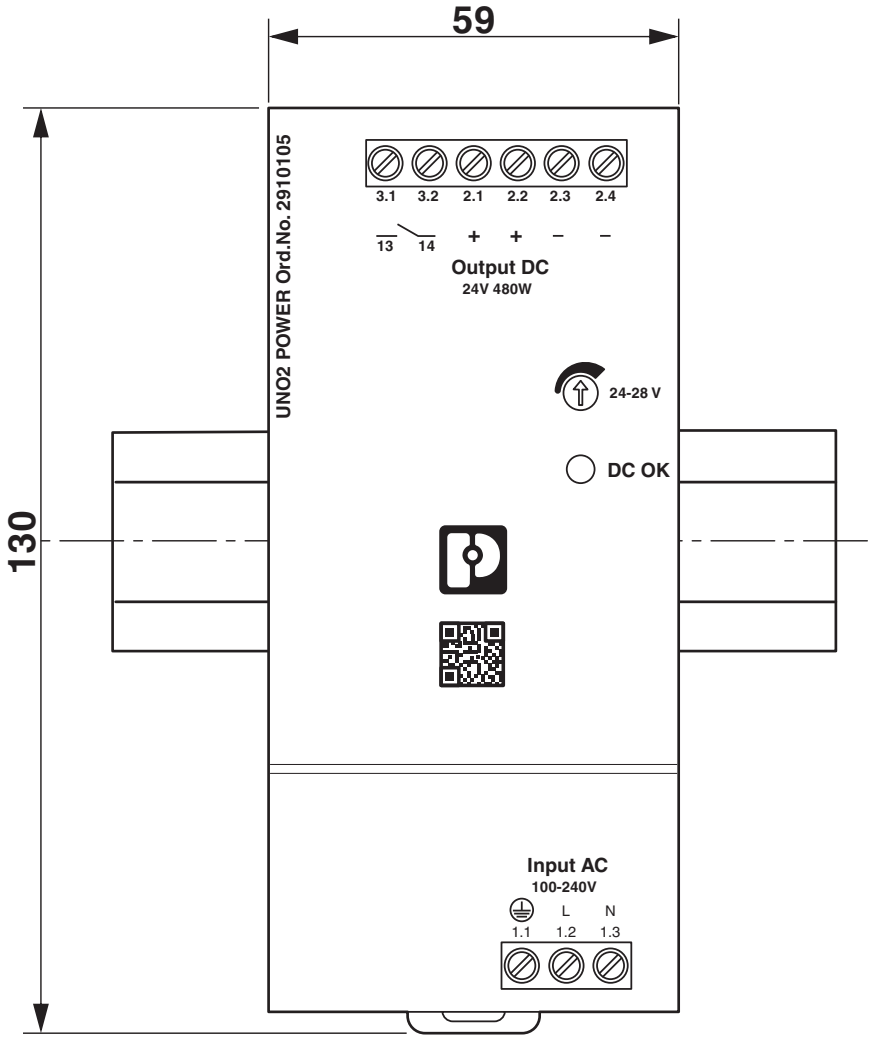

Dimensional drawing

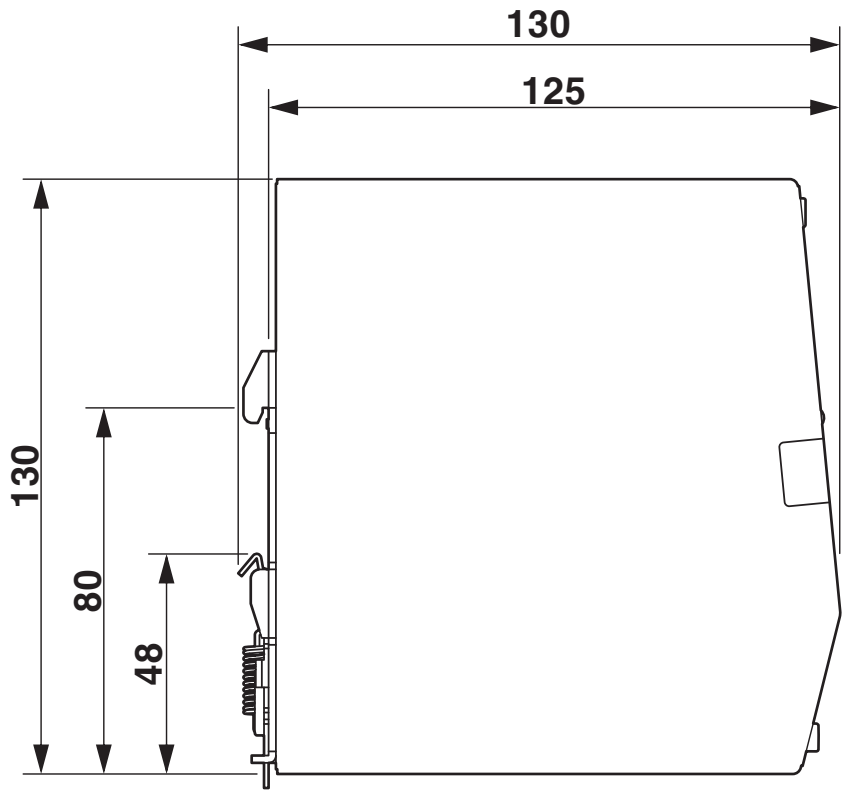

Schematic diagram

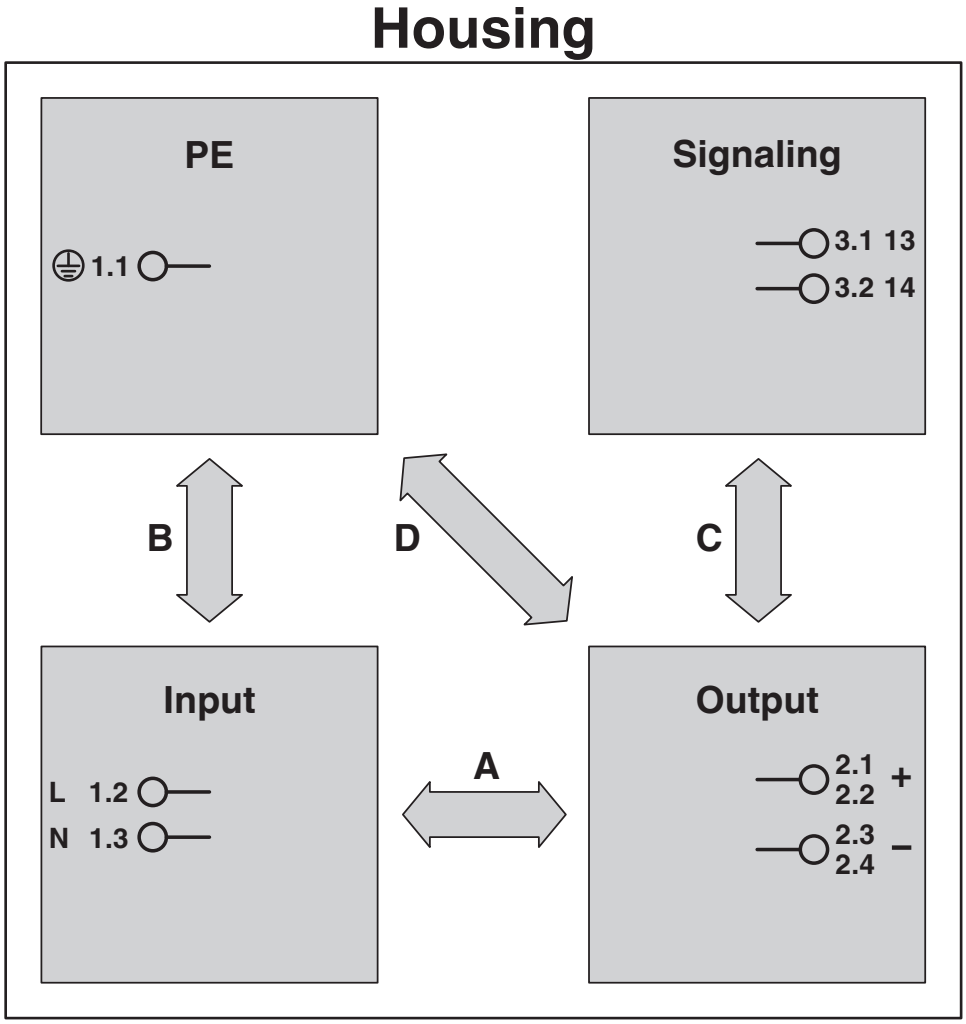

Diagram

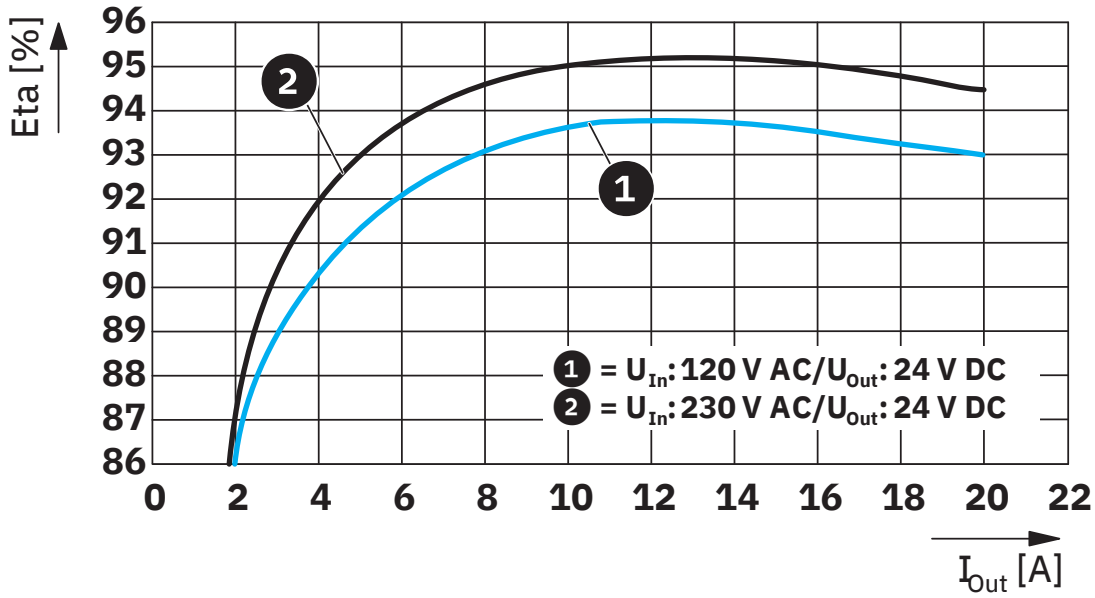

Diagram

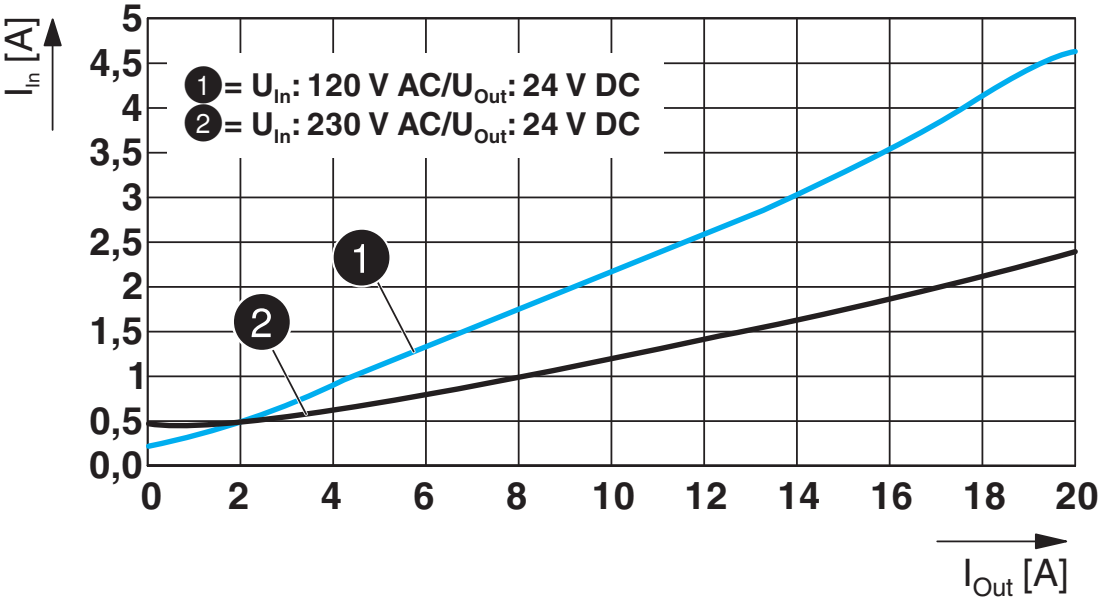

Diagram

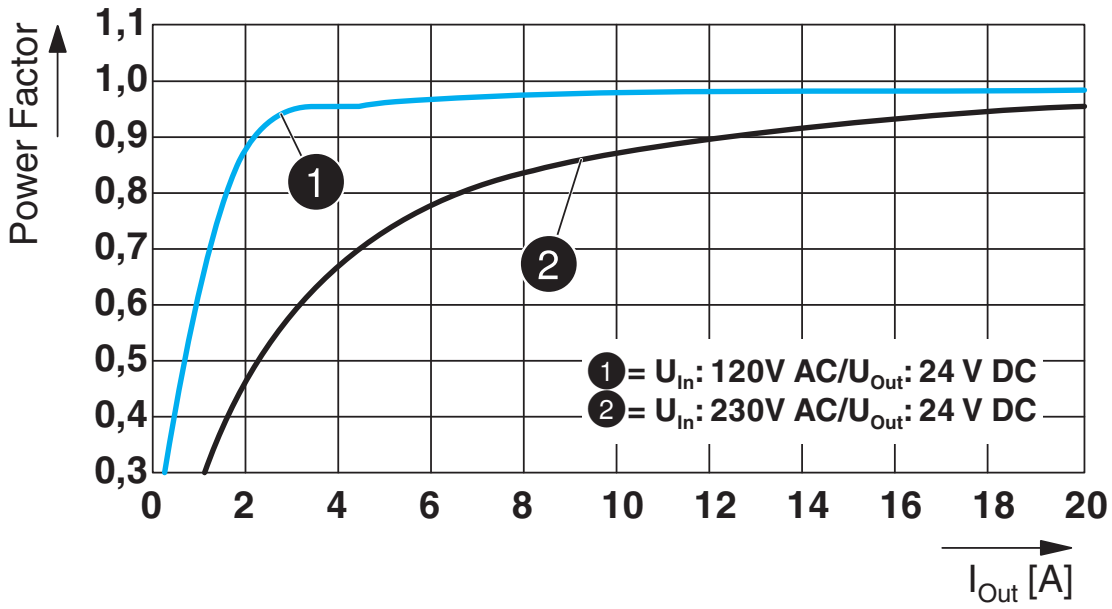

Diagram

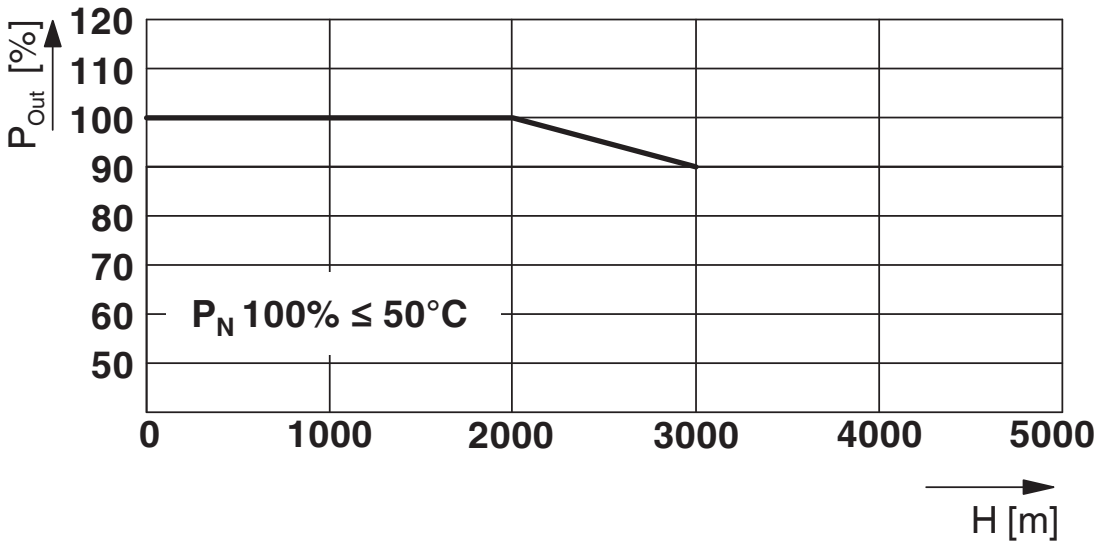

Block diagram

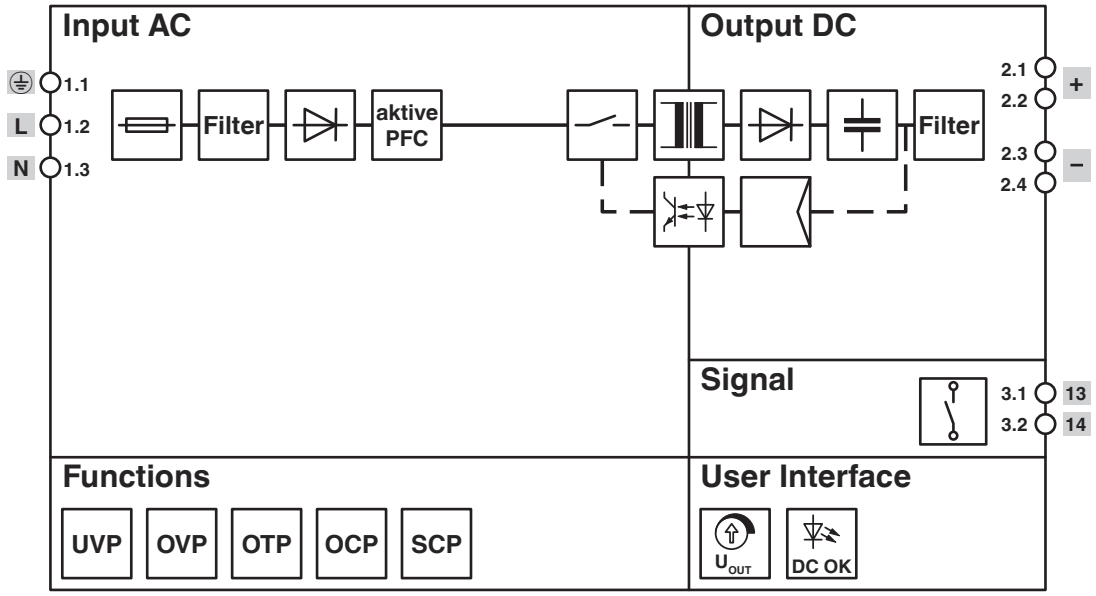

Approvals

To download certificates, visit the product detail page: https://www.phoenixcontact.com/us/products/2910105

IECEE CB Scheme
Approval ID: SI-8862

UL Listed
Approval ID: E123528

cUL Listed
Approval ID: E123528

EAC
Approval ID: RU S-DE.BL08.W.00764

cUL Listed
Approval ID: E199827

UL Listed
Approval ID: E199827

Classifications

ECLASS

ECLASS-13.0	27040701
ECLASS-15.0	27040701

ETIM

ETIM 10.0	EC002540

UNSPSC

UNSPSC 21.0	39121000

Environmental product compliance

EU RoHS

Fulfills EU RoHS substance requirements	Yes
Exemption	7(a), 7(c)-I

China RoHS

Environment friendly use period (EFUP)	EFUP-25
	An article-related China RoHS declaration table can be found in the download area for the respective article under "Manufacturer declaration". For all articles with EFUP-E, no China RoHS declaration table issued and required.

EU REACH SVHC

REACH candidate substance (CAS No.)	Lead(CAS: 7439-92-1)
SCIP	73c1ec9c-e95e-4452-8f4b-8bfe396d6c7e

EF3.1 Climate Change

CO2e kg	37.414 kg CO2e

Phoenix Contact 2026 © - all rights reserved
https://www.phoenixcontact.com

Phoenix Contact USA
586 Fulling Mill Road
Middletown, PA 17057, United States
(+717) 944-1300
info@phoenixcon.com