PTCB E1 24DC/6A NO - Electronic circuit breaker

2909908

https://www.phoenixcontact.com/us/products/2909908

Please be informed that the data shown in this PDF document is generated from our online catalog. Please find the complete data in the user documentation. Our general terms of use for downloads are valid.

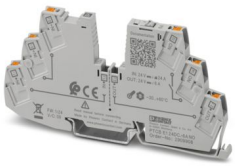

1-channel, electronic circuit breaker for protecting loads at 24 V DC against overload and short circuit. Easy potential distribution with components from the CLIPLINE complete terminal block system. With fixed nominal current. For installation on DIN rails.

Your advantages

- Simple application setup due to bridging option to CLIPLINE complete terminal block system
- More space in the control cabinet: narrowest protection on just 6 mm width
- Individual setup for suitable protection, exactly according to your requirements

ELEKTROGERÄTE RÜCKNAHME

Commercial data

Item number	2909908
Packing unit	1 pc
Minimum order quantity	1 pc
Sales key	CL10
Product key	CLA135
GTIN	4055626408750
Weight per piece (including packing)	34.4 g
Weight per piece (excluding packing)	34 g
Customs tariff number	85363010
Country of origin	US

Technical data

Notes

General

Note	EN 50121-3-2: Railway applications - Electromagnetic compatibility - Part 3-2: Rolling stock – Apparatus
	Connection for signal line tested in accordance with EN 61000-4-4 with 1 kV; if necessary, customer must provide appropriate protective measures
	Repeated hard short circuits can reduce the melting integral of the integrated backup fuse.
	Always connect the negative pole to terminal IN- to ensure the internal power supply. Return currents from the loads must not be fed back to the power supply via IN- of the circuit breaker.

Product properties

Product type	Device circuit breakers
Product family	PTCB
Type	DIN rail module, one-piece
Number of positions	1
No. of channels	1

Insulation characteristics

Protection class	III
Pollution degree	2

Electrical properties

General

Operating voltage	18 V DC ... 30 V DC
Rated voltage	24 V DC
Rated current I_N	24 A (Total current input)
	6 A (Rated current output)
Rated current (pre-adjusted)	6 A
Rated surge voltage	0.5 kV
Tripping method	E (electronic)
Feedback resistance	max. 35 V DC
Required backup fuse	Only required if I_{max} of the power supply > the short-circuit switching capacity. Integrated failsafe element.
Short-circuit switching capacity	300 A
Dielectric strength	max. 35 V DC (Load circuit)
Fuse	electronic
Efficiency	> 99 %
Closed circuit current I_0	typ. 12 mA
Power dissipation	typ. 0.3 W (No-load operation)
	< 1.2 W (Nominal operation)

Module initialization time	< 0.55 s
Waiting time after switch off of a channel	5 s (at overload / short circuit)
Measuring tolerance I	± 15 %
Temperature derating	21 A (Total current at 60°C)
	24 A (Total current at 50°C)
	6 A (Channel current at 60°C)
	6 A (Channel current at 50°C)
MTBF (IEC 61709, SN 29500)	27777777 h (at 25 °C with 21 % load)
	12658227 h (at 40°C with 34.25% load)
	1414427 h (at 60°C with 100% load)
Voltage drop	0.1 V (at 6 A)
Fail-safe element	15 A DC
Contact switching type	without electrical isolation

Load circuit

Shutdown time	≤ 10 ms (for short circuit > 2.0 x I_N)
	1 s (1.2 ... 2.0 x I_N)
Undervoltage switch-off	≤ 17.8 V DC (active)
	≥ 18.8 V DC (inactive)
Overvoltage switch-off	≥ 30.5 V DC (active)
	≤ 29.5 V DC (inactive)
Max. capacitive load	24000 µF (Depending on the available short-circuit current)

Indicator/remote signaling

Connection name	Remote indication circuit
Switching function	N/O contact
Operating voltage	0 V DC ... 30 V DC
Operating current	100 mA DC

Connection data

Main circuit IN+

Connection method	Push-in connection
Stripping length	8 mm
Conductor cross-section flexible	0.2 mm² ... 2.5 mm²
Conductor cross-section rigid	0.2 mm² ... 4 mm²
Conductor cross-section AWG	24 ... 12
Conductor cross-section, flexible, with ferrule, with plastic sleeve	0.2 mm² ... 2.5 mm²
Conductor cross-section, flexible, with ferrule, without plastic sleeve	0.2 mm² ... 2.5 mm²

Main circuit IN-

Connection method	Push-in connection
Stripping length	8 mm
Conductor cross-section flexible	0.2 mm² ... 2.5 mm²
Conductor cross-section rigid	0.2 mm² ... 4 mm²

Conductor cross-section AWG	24 ... 12
Conductor cross-section, flexible, with ferrule, with plastic sleeve	0.2 mm² ... 2.5 mm²
Conductor cross-section, flexible, with ferrule, without plastic sleeve	0.2 mm² ... 2.5 mm²

Main circuit OUT

Connection method	Push-in connection
Stripping length	8 mm
Conductor cross-section flexible	0.2 mm² ... 2.5 mm²
Conductor cross-section rigid	0.2 mm² ... 4 mm²
Conductor cross-section AWG	24 ... 12
Conductor cross-section, flexible, with ferrule, with plastic sleeve	0.2 mm² ... 2.5 mm²
Conductor cross-section, flexible, with ferrule, without plastic sleeve	0.2 mm² ... 2.5 mm²

Remote indication circuit

Connection method	Push-in connection
Stripping length	8 mm
Conductor cross-section flexible	0.2 mm² ... 2.5 mm²
Conductor cross-section rigid	0.2 mm² ... 4 mm²
Conductor cross-section AWG	24 ... 14
Conductor cross-section, flexible, with ferrule, with plastic sleeve	0.2 mm² ... 2.5 mm²
Conductor cross-section, flexible, with ferrule, without plastic sleeve	0.2 mm² ... 2.5 mm²

Signaling

Channel LED off	off (Channel switched off)
Channel LED yellow	lit (Channel switched on, channel load > 80%)
	flashing (Programming mode active)
Channel LED green	lit (Channel switched on)
Channel LED red	lit (Channel switched off, over- or undervoltage active)
	ON temporarily (Channel switched off, 5 s cool-down phase, overload or short-circuit release)
	flashing (Channel switched off, ready to be switched back on, overload or short-circuit release)
	flashing quickly (Channel switched off, external voltage at the output, possible installation error)

Dimensions

Dimensional drawing	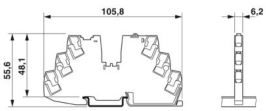
Width	6.2 mm
Height	105.8 mm
Depth	55.6 mm (incl. DIN rail 7.5 mm)

Material specifications

Color	gray (RAL 7042)
Material	PBT
	PBT
Flammability rating according to UL 94	V-0

Environmental and real-life conditions

Ambient conditions

Degree of protection	IP20
Ambient temperature (operation)	-30 °C ... 60 °C
Ambient temperature (storage/transport)	-40 °C ... 70 °C
Altitude	≤ 3000 m up to 52 °C (amsl)
	≤ 4000 m up to 46 °C (amsl)
Humidity test	96 h, 95 % RH, 40 °C
Shock (operation)	30g (IEC 60068-2-27, Test Ea)
Vibration (operation)	10 Hz ... 59.6 Hz (Amplitude ±0.35 mm; in accordance with IEC 60068-2-6, Test Fc)
	59.6 Hz ... 150 Hz (Acceleration 5g; in accordance with IEC 60068-2-6, Test Fc)
	5 Hz ... 100 Hz (Resonance search 4g; resonance frequency 4g; 90 min in accordance with DNV GL Class B)

Approvals

UL approval

Identification	UL/C-UL Listed UL 508
	UL Recognized UL 2367
	UL/C-UL Listed ANSI/UL 121201 Class I, Division 2, Groups A, B, C, D; T4 (Hazardous Location)

Shipbuilding approval

Identification	DNV GL

Corrosive gas test

Identification	ISA S71.04.2013 G3 Harsh Group A

Shipbuilding data

Temperature	D
Humidity	B
Vibration	B
EMC	B
Enclosure	A

Standards and regulations

Standards/specifications	EN 61000-6-2
Note	EMC – Immunity for industrial areas

Standards/specifications	EN 61000-6-3
Note	EMC – Emission for residential, business and commercial properties and small operations
Standards/specifications	EN 60068-2-78
Note	Environmental influences – Moisture and heat, constant
Standards/specifications	EN 50178
Note	Equipping power installations with electronic equipment
Standards/specifications	EN 60068-2-6
Note	Environmental influences – Vibrations (sinusoidal)
Standards/specifications	EN 60068-2-27
Note	Environmental influences – Shocks
Standards/specifications	EN 60068-2-30
Note	Environmental influences – Part 2–30: Tests – Test Db: Damp heat, cyclical
Standards/specifications	EN 61373
Note	Railway applications - Rolling stock equipment - Shock and vibration tests
Standards/specifications	EN 45545-2
Note	Railway applications - Fire protection on railway vehicles - Part 2: Requirements for fire behavior of materials and components

Mounting

Mounting type	DIN rail: 35 mm

Drawings

Dimensional drawing

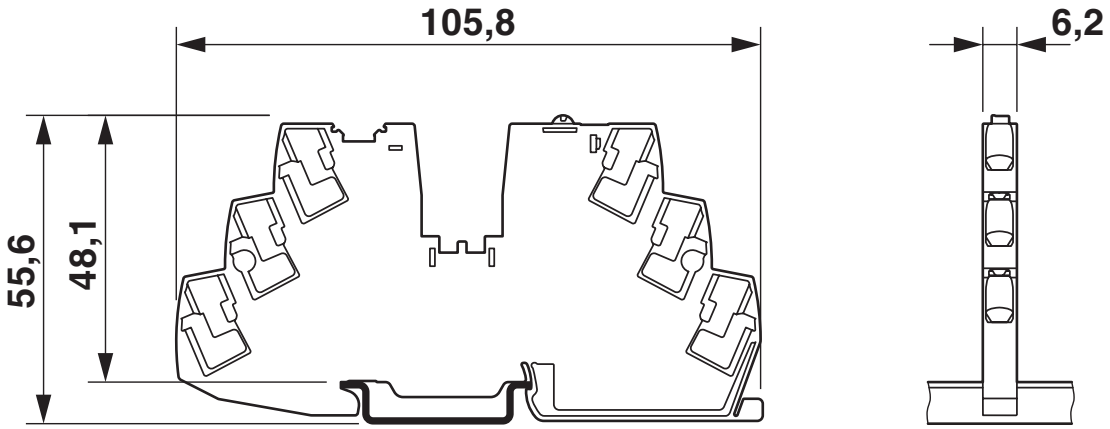

Product drawing

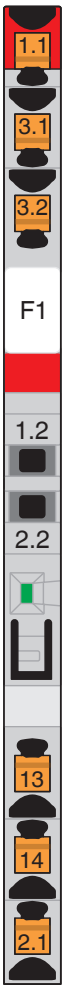

Application drawing

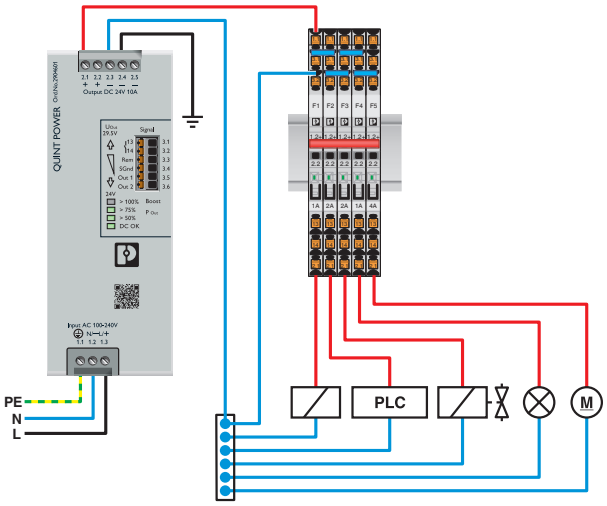

Application drawing

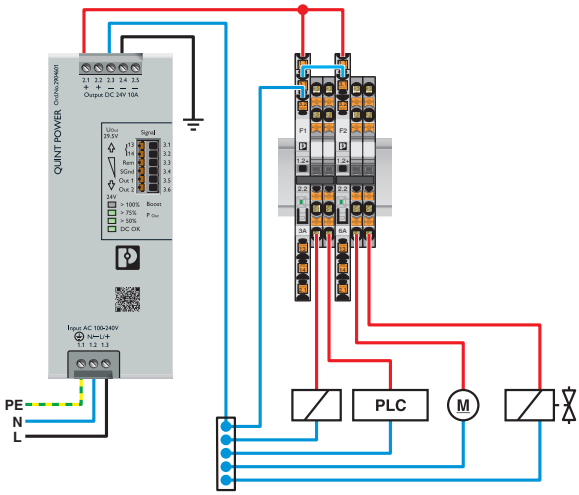

Diagram

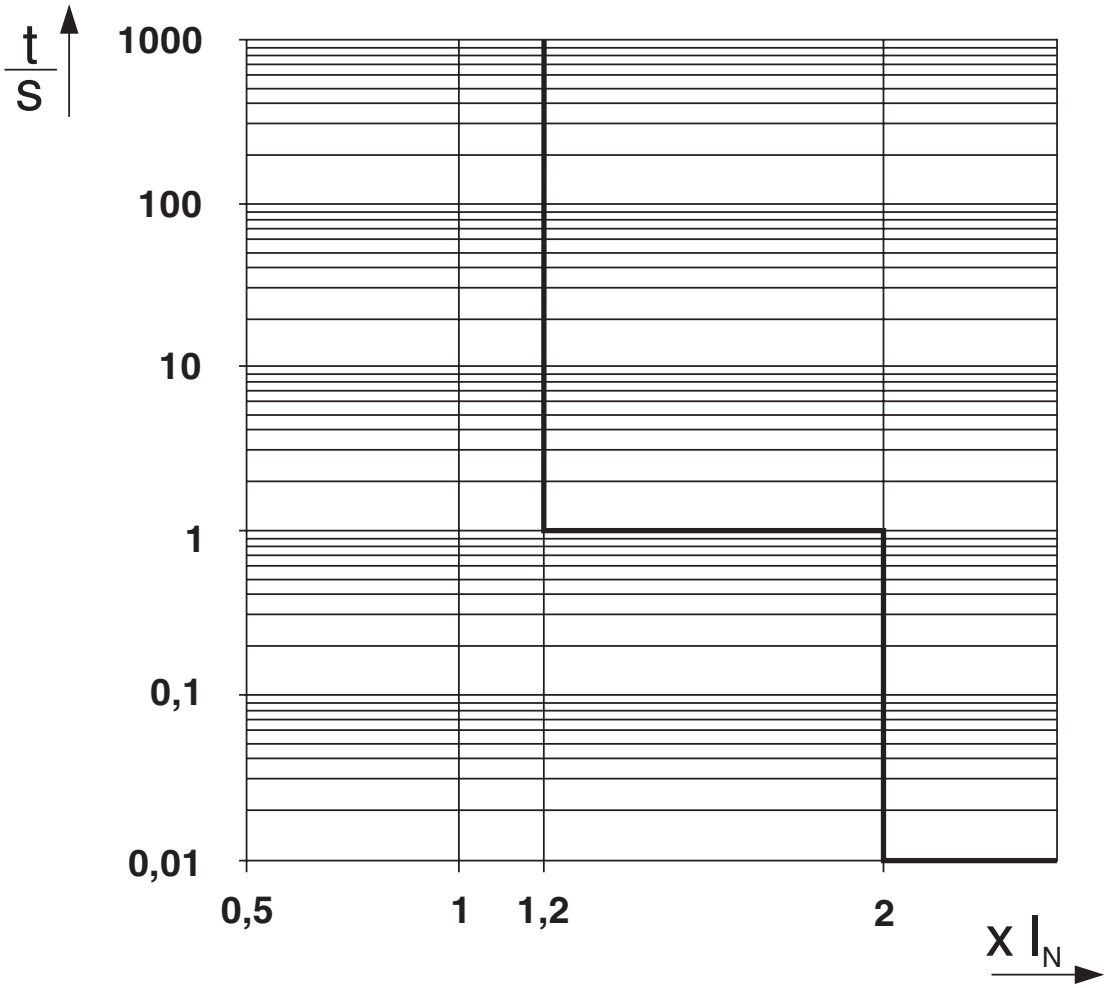

Trigger characteristic in the DC range

Diagram

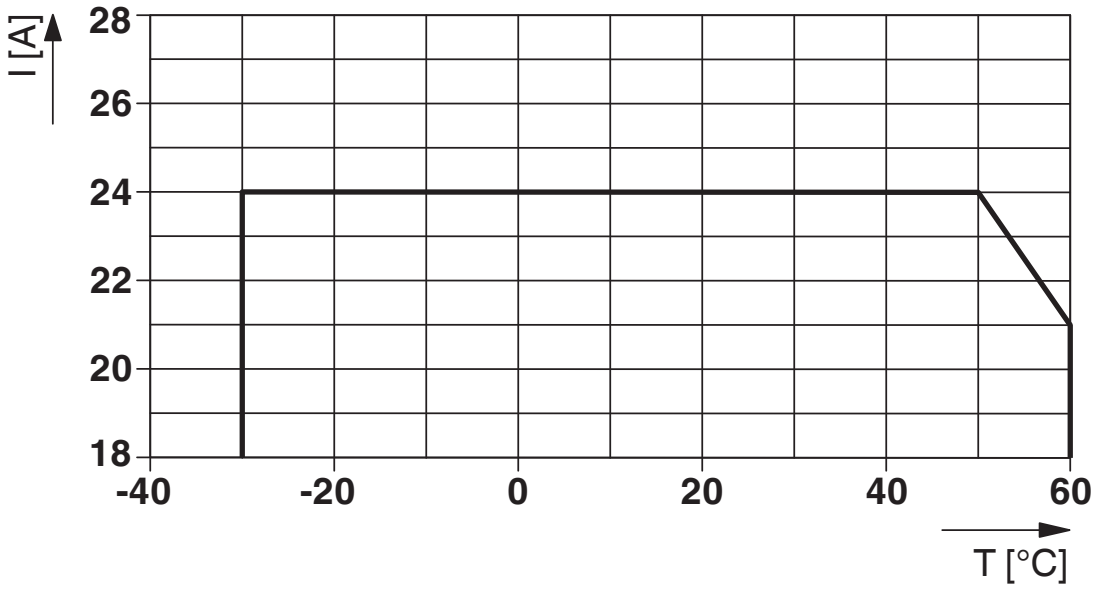

Total current input

Block diagram

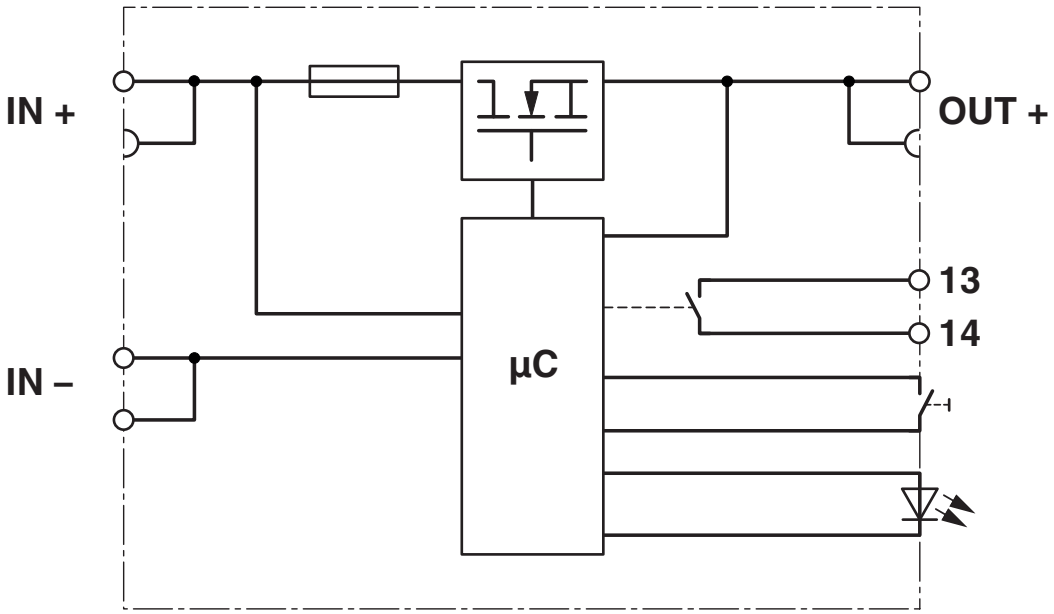

Approvals

To download certificates, visit the product detail page: https://www.phoenixcontact.com/us/products/2909908

UL Recognized
Approval ID: E317172-20170817

DNV GL
Approval ID: TAE00003UT

UL Listed
Approval ID: E123528-20170530

cUL Listed
Approval ID: E123528-20170530

UL Recognized
Approval ID: E324415-20201030

cUL Listed
Approval ID: E483407-20201030

UL Listed
Approval ID: E483407-20201030

Classifications

ECLASS

ECLASS-13.0	27140401
ECLASS-15.0	27140401

ETIM

ETIM 10.0	EC003538

UNSPSC

UNSPSC 21.0	39121400

Environmental product compliance

EU RoHS

Fulfills EU RoHS substance requirements	Yes
Exemption	7(a), 7(c)-I

China RoHS

Environment friendly use period (EFUP)	EFUP-50
	An article-related China RoHS declaration table can be found in the download area for the respective article under "Manufacturer declaration". For all articles with EFUP-E, no China RoHS declaration table issued and required.

EU REACH SVHC

REACH candidate substance (CAS No.)	Lead(CAS: 7439-92-1)
SCIP	8831cac2-13e6-47bd-b6b3-fc1b1b60ebbd

EF3.1 Climate Change

CO2e kg	1.521 kg CO2e

Phoenix Contact 2026 © - all rights reserved
https://www.phoenixcontact.com

Phoenix Contact USA
586 Fulling Mill Road
Middletown, PA 17057, United States
(+717) 944-1300
info@phoenixcon.com