EEM-MA770-PN - Measuring device

2907946

https://www.phoenixcontact.com/us/products/2907946

Please be informed that the data shown in this PDF document is generated from our online catalog. Please find the complete data in the user documentation. Our general terms of use for downloads are valid.

CRA-READY



Multifunctional energy measuring device with integrated Modbus/TCP and PROFINET interface for measuring electrical parameters in low-voltage electrical installations up to 690 V. (phoenixcontact.com/empro-help). The product is being prepared for compliance with the Cyber Resilience Act (CRA).

Product description

The multifunctional EMpro energy measuring devices acquire your energy data and offer numerous options for communicating the data to higher-level control and management systems. Configure and integrate your energy measuring devices in just a few steps using the web-based, user-guided installation wizard. In addition, benefit from many practice-oriented web server and device functions.

Your advantages

- Energy measurement in just three steps with the intuitive installation wizard
- Easy commissioning and service with intelligent web server and display functions
- Data protection through the targeted deactivation of key configuration functions and interfaces
- Fast integration into control and management systems with future-oriented communication solutions and digital services

Commercial data

Item number	2907946
Packing unit	1 pc
Minimum order quantity	1 pc
Sales key	C446
Product key	CMMC21
GTIN	4055626260372
Weight per piece (including packing)	518 g
Weight per piece (excluding packing)	428.77 g
Customs tariff number	90303100
Country of origin	DE

Technical data

Notes

Note on application

Note on application	As things stand now, we are preparing the product so that, as of December 11, 2027, it will comply with the requirements of the EU Cyber Resilience Act (CRA) based on the information currently available regarding the CRA.

Product properties

Product type	Energy measuring device
Product family	EMpro
Number (Ethernet ports)	3
Special properties	The product is being prepared for compliance with the Cyber Resilience Act (CRA)

Display

Display type	LCD display, backlit, 2-color, multi-line

Electrical properties

Maximum power dissipation for nominal condition	10 VA
Mains type	3-phase (3 or 4-conductor), 2-phase (2-conductor), and single-phase (1-conductor)

Electrical isolation

Test voltage	4 kV AC (50 Hz, 60 s)
Pollution degree	2
Insulation	Reinforced insulation

Electrical isolation Housing against all potentials IEC 61010-1

Standards/regulations	IEC 61010-1
Overvoltage category	III (300 V AC)
	II (600 V AC)
Insulation	Reinforced insulation

Electrical isolation Supply against all other potentials IEC 61010-1

Standards/regulations	IEC 61010-1
Overvoltage category	III (300 V AC)
	II (600 V AC)
Insulation	Reinforced insulation

Electrical isolation Voltage measurement input against all other potentials IEC 61010-2-030

Standards/regulations	IEC 61010-2-030
Measuring category	III (300 V AC)
	II (600 V AC)
Insulation	Reinforced insulation

Electrical isolation Current measurement input against all other potentials

Insulation	Functional insulation

Electrical isolation Digital I/Os

Insulation	Functional insulation

Electrical isolation Communication interface

Insulation	Functional insulation

Supply

Supply voltage range	100 V AC ... 400 V AC (±20 %)
	150 V DC ... 250 V DC (±20 %)
Power consumption	≤ 4 W
Nominal frequency	50 Hz ... 60 Hz (AC sine)

Input data

Measuring data acquisition

Measuring principle	True r.m.s. value measurement (seamless)
Frequency measuring range (Fundamental component)	45 Hz ... 65 Hz
Measured value	AC sine (50 Hz/60 Hz)
Scanning rate	12,8 kHz (50 Hz) / 15,4 kHz (60 Hz)
Number of periods	10 (true RMS value at 50 Hz)
	12 (true RMS value at 60 Hz)
Acquisition of harmonics	up to 63rd harmonic

Measurement: Voltage

Input name	Voltage measuring input V1, V2, V3
Input voltage range direct	18 V AC ... 690 V AC (Phase/Phase)
	11 V AC ... 400 V AC (Phase/neutral conductor)
Input voltage range via external transformers	60 V AC ... 2000000 V AC (primary)
	60 V AC ... 400 V AC (secondary)
Surge voltage capacity	760 V AC (Phase/Phase)
Precision	0.2 %
Power consumption	< 0.5 VA

Measurement: Current

Input name	Current measurement I1, I2, I3
Input current	1 A (secondary)
	5 A (secondary)
Measuring range	1 A ... 20000 A (primary)
Overload capacity	6 A (I_{max})
Response threshold from measuring range nominal value	10 mA (1 A)
	50 mA (5 A)
Precision	0.2 %
Current overload	50 A for 1 s

	20 A (4 x I_N, continuous)
Power consumption	< 0.5 VA

Measurement: Power

Precision	0.5 %
Active energy (IEC 62053-22)	Class 0.5 S
Reactive power (IEC 62053-23)	Class 2
ANSI C12.20	Class 0.5 S

Digital

Description of the input	Digital input in accordance with IEC/EN 61131-2 (type 3)
Number	1
Voltage input signal	24 V DC
	0 V DC ... 30 V DC
Current input signal	2 mA ... 15 mA
Protection	250 mA (fast-blow)
Protective circuit	Protection against incorrect DC connection (max. 30 V)

Output data

Digital

Output description	Digital output in accordance with IEC/EN 61131-2 (type 3)
Number	1
Current output signal	≤ 100 mA
Voltage output signal	24 V DC
Protection	250 mA (fast-blow)
Protective circuit	Protection against incorrect DC connection (max. 30 V)

Connection data

Current / voltage / supply

Connection method	Screw connection
Stripping length	8 mm
Screw thread	M3
Conductor cross-section rigid	0.2 mm² ... 6 mm²
Conductor cross-section flexible	0.2 mm² ... 4 mm²
Conductor cross-section AWG	24 ... 10
Tightening torque	0.5 Nm ... 0.6 Nm

Digital I/O / communication

Connection method	Screw connection
Stripping length	7 mm
Screw thread	M3
Conductor cross-section rigid	0.14 mm² ... 2.5 mm²
Conductor cross-section flexible	0.14 mm² ... 1.5 mm²
Conductor cross-section AWG	26 ... 14

Tightening torque	0.5 Nm ... 0.6 Nm

Interfaces

Data: Network interface

Communication protocol	Modbus/TCP
	REST
	MQTT
Connection method	RJ45
Transmission speed	10 Mbps
	100 Mbps

Data: Network interface

Communication protocol	PROFINET RT
Connection method	RJ45
Number of connections	2
Note	CC-B

Dimensions

Item dimensions

Width	96 mm
Height	96 mm
Depth	89.8 mm
	74.8 mm (Installation depth)

Panel feed-through

Width	92 mm (Control panel cutout)
Height	92 mm (Control panel cutout)
Strength	≤ 5 mm (Permissible control panel thickness for installation)

Material specifications

Color	gray (RAL 7042)

Environmental and real-life conditions

Ambient conditions

Degree of protection	IP20 (Housing)
	IP54 (Display with seal (included))
Ambient temperature (operation)	-10 °C ... 55 °C
Ambient temperature (storage/transport)	-40 °C ... 70 °C
Altitude	≤ 2000 m
Max. permissible relative humidity (operation)	≤ 95 % (non-condensing)

Approvals

CE

Certificate	CE-compliant

UL, USA/Canada

Identification	UL/C-UL Listed UL 61010-1

UL data

Operating mode	Indoor use

Standards and regulations

Standards/regulations	IEC 61010-1
	IEC 61326-1
	IEC 61557-12

Mounting

Mounting type	Panel mount
Mounting position	Front panel installation, horizontal

Drawings

Connection diagram

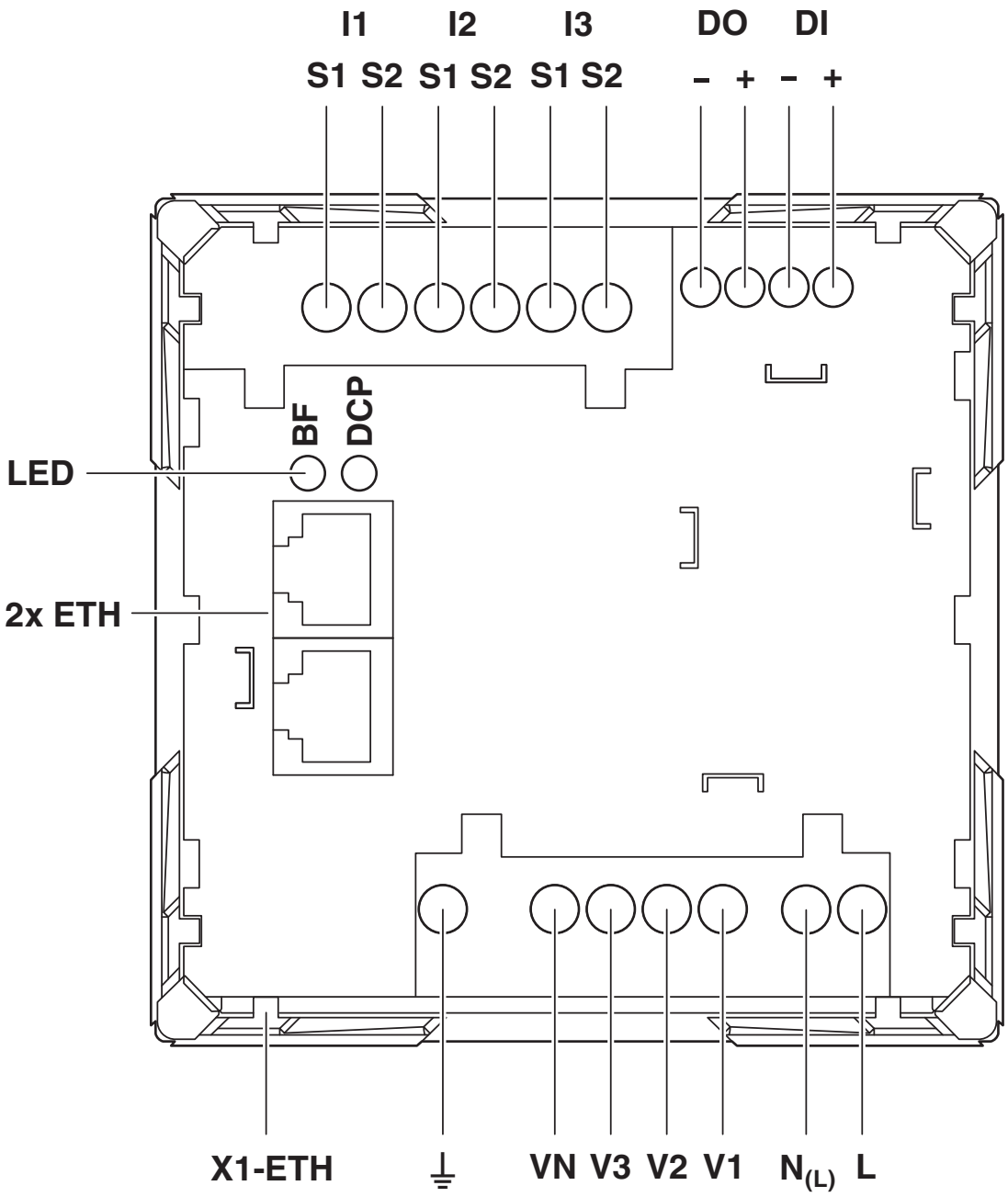

Connection assignment

Connection diagram

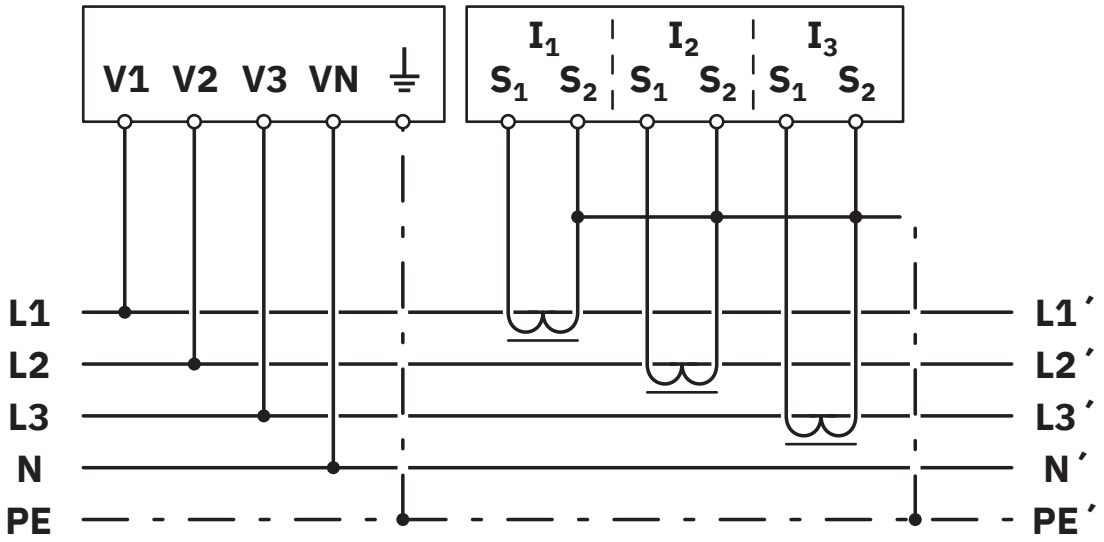

Network type: 3PH-4W-3CT

Connection diagram

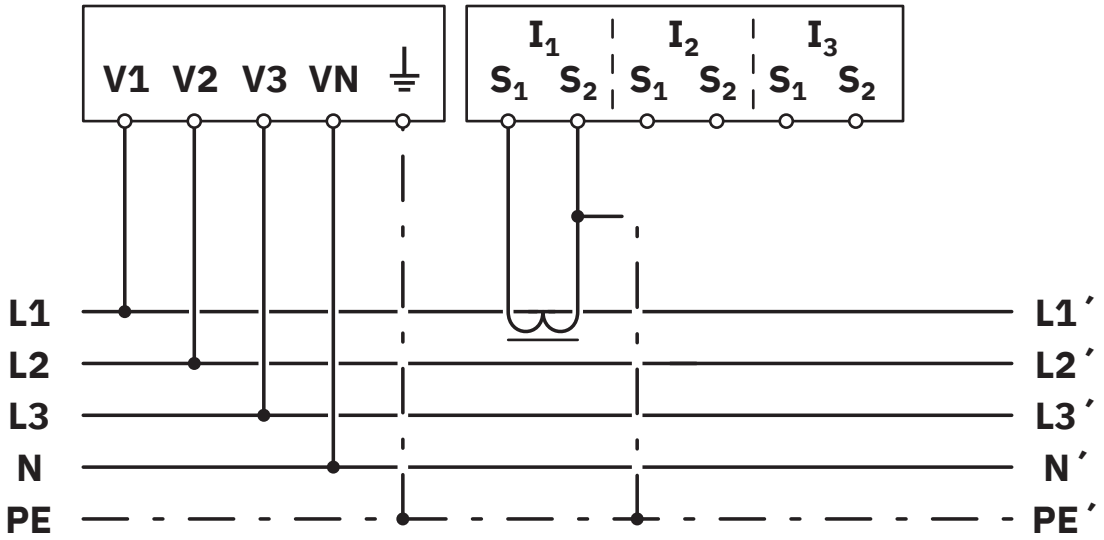

Network type: 3PH-4W-1CT

Connection diagram

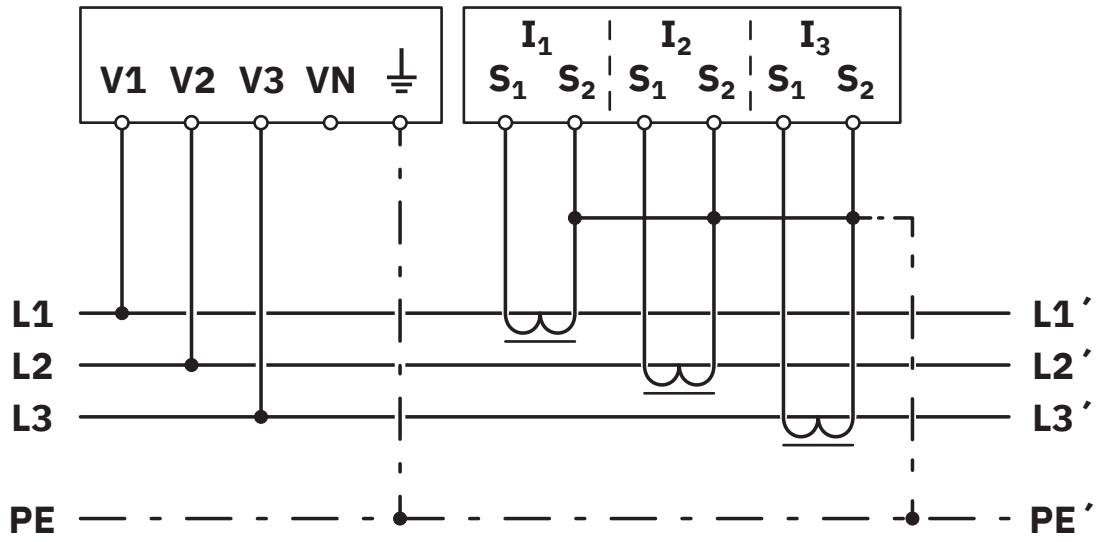

Network type: 3PH-3W-3CT

Connection diagram

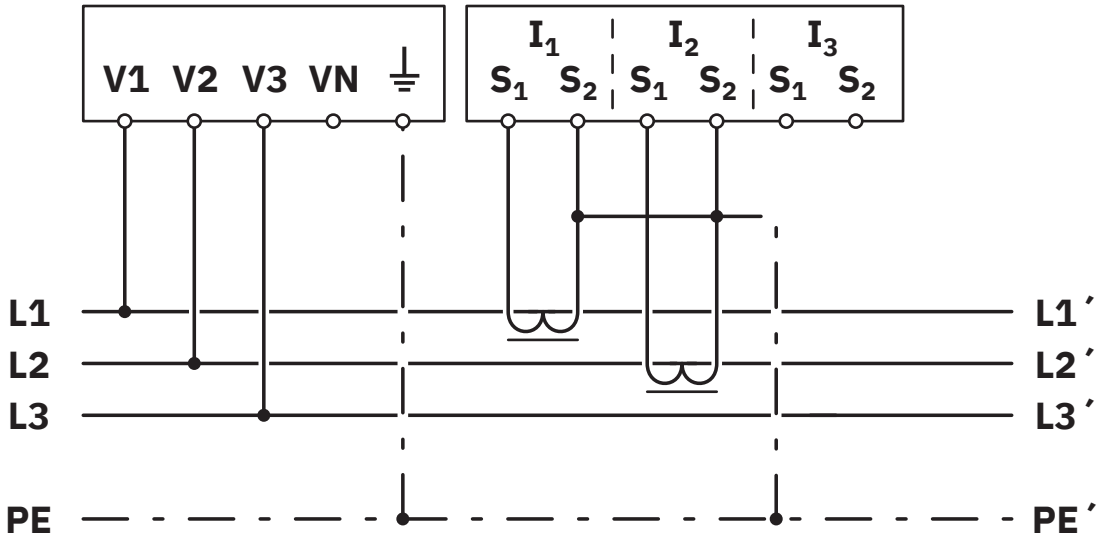

Network type: 3PH-3W-2CT

Connection diagram

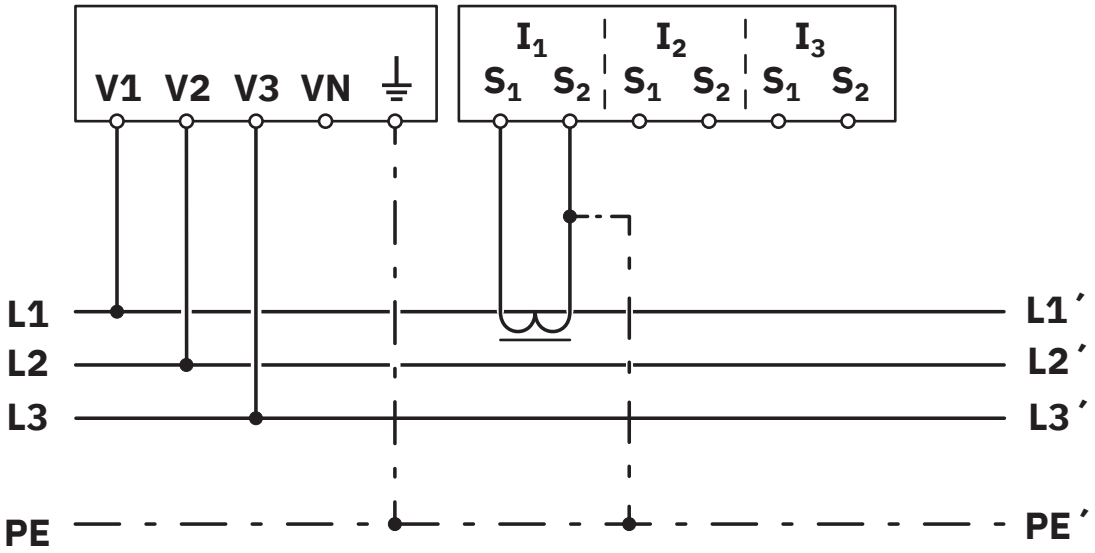

Network type: 3PH-3W-1CT

Connection diagram

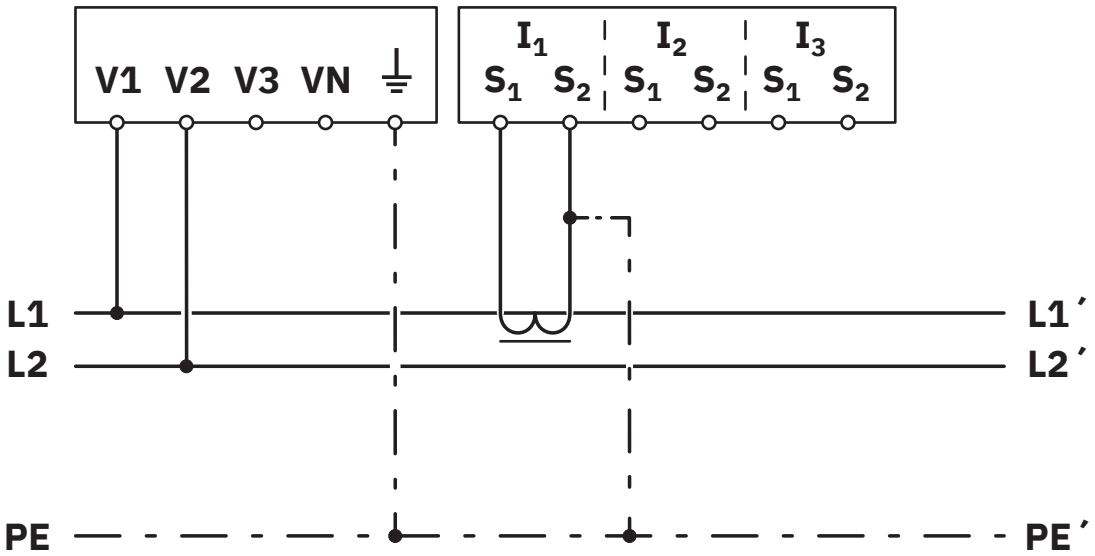

Network type: 2PH-2W-1CT

Connection diagram

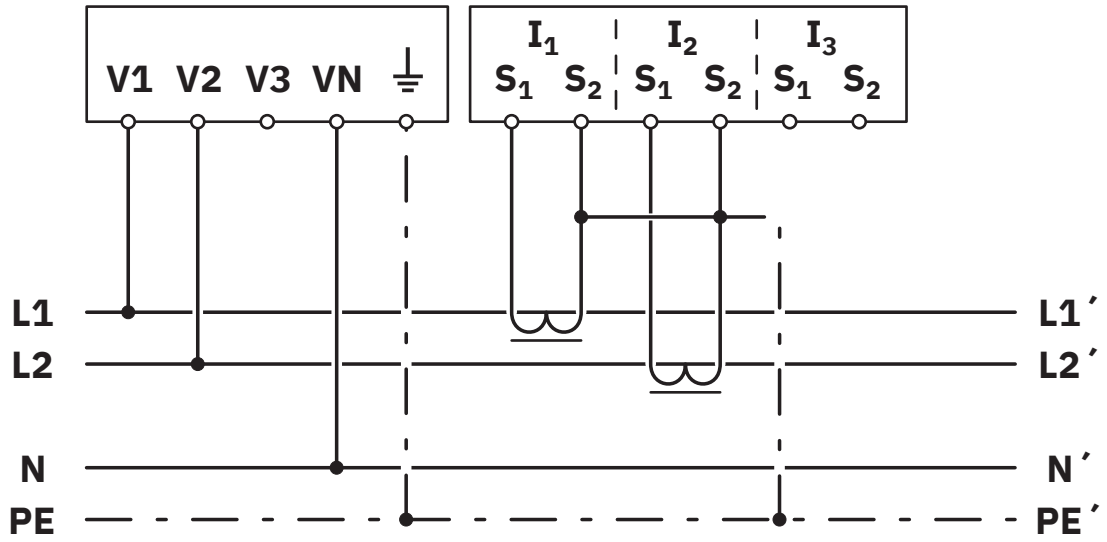

Network type: 2PH-3W-2CT

Connection diagram

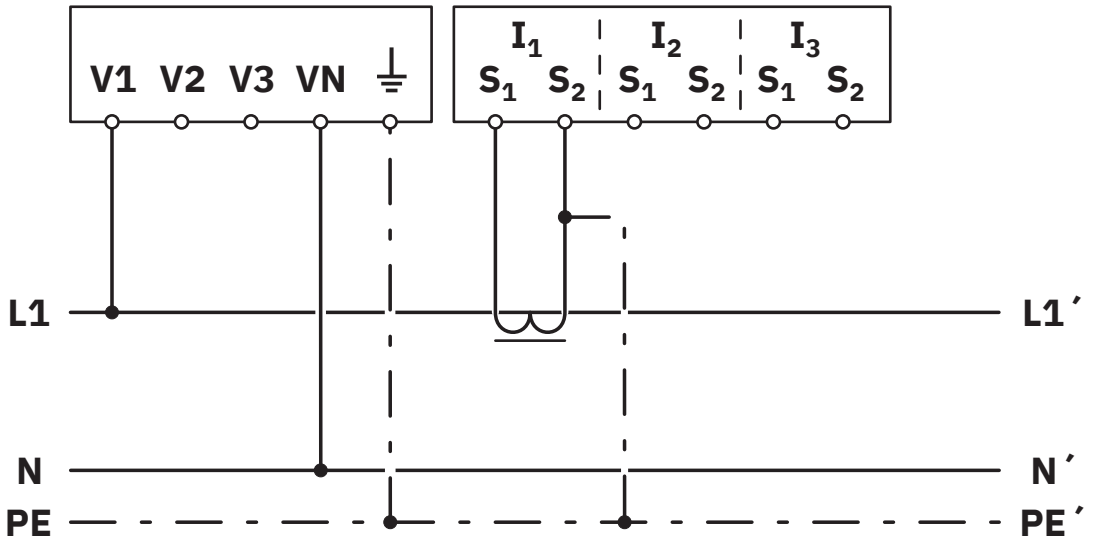

Network type: 1PH-2W-1CT

Schematic diagram

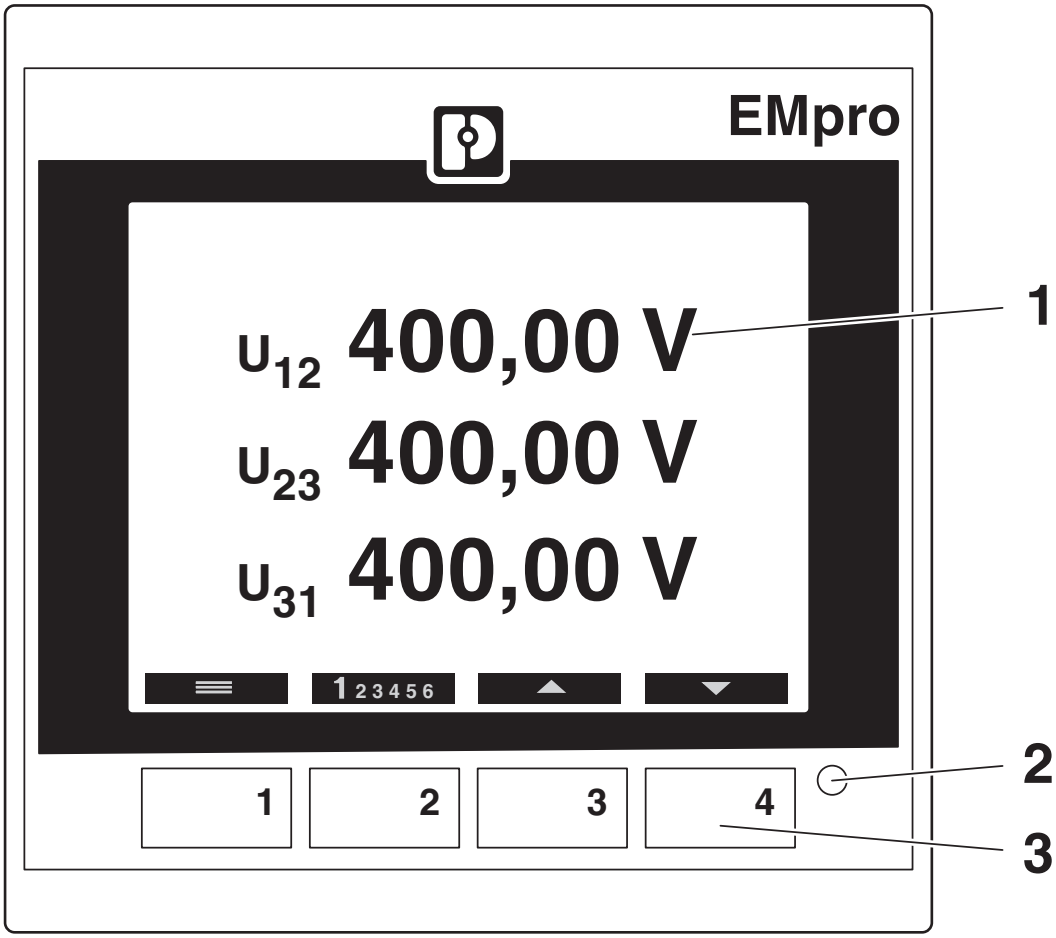

Operating and indication elements
1 Backlit LCD
2 Pulse LED
3 Operating buttons for displaying measured values and for changing the configuration

Schematic diagram

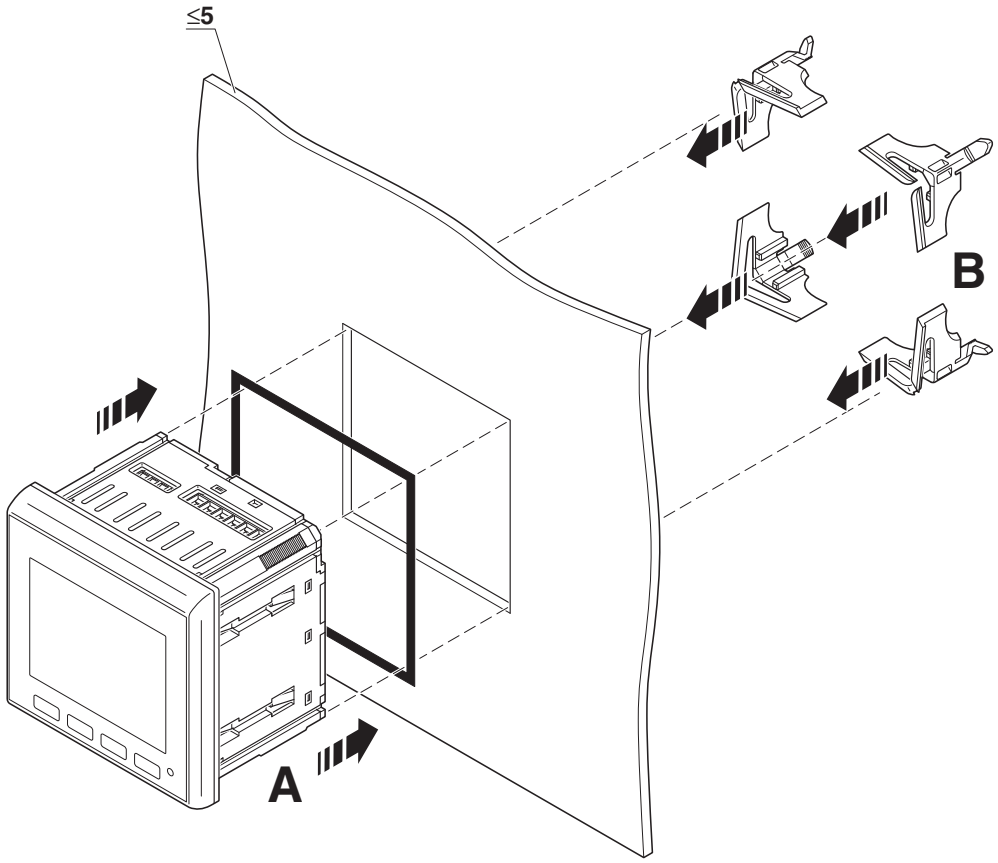

Mounting

Schematic diagram

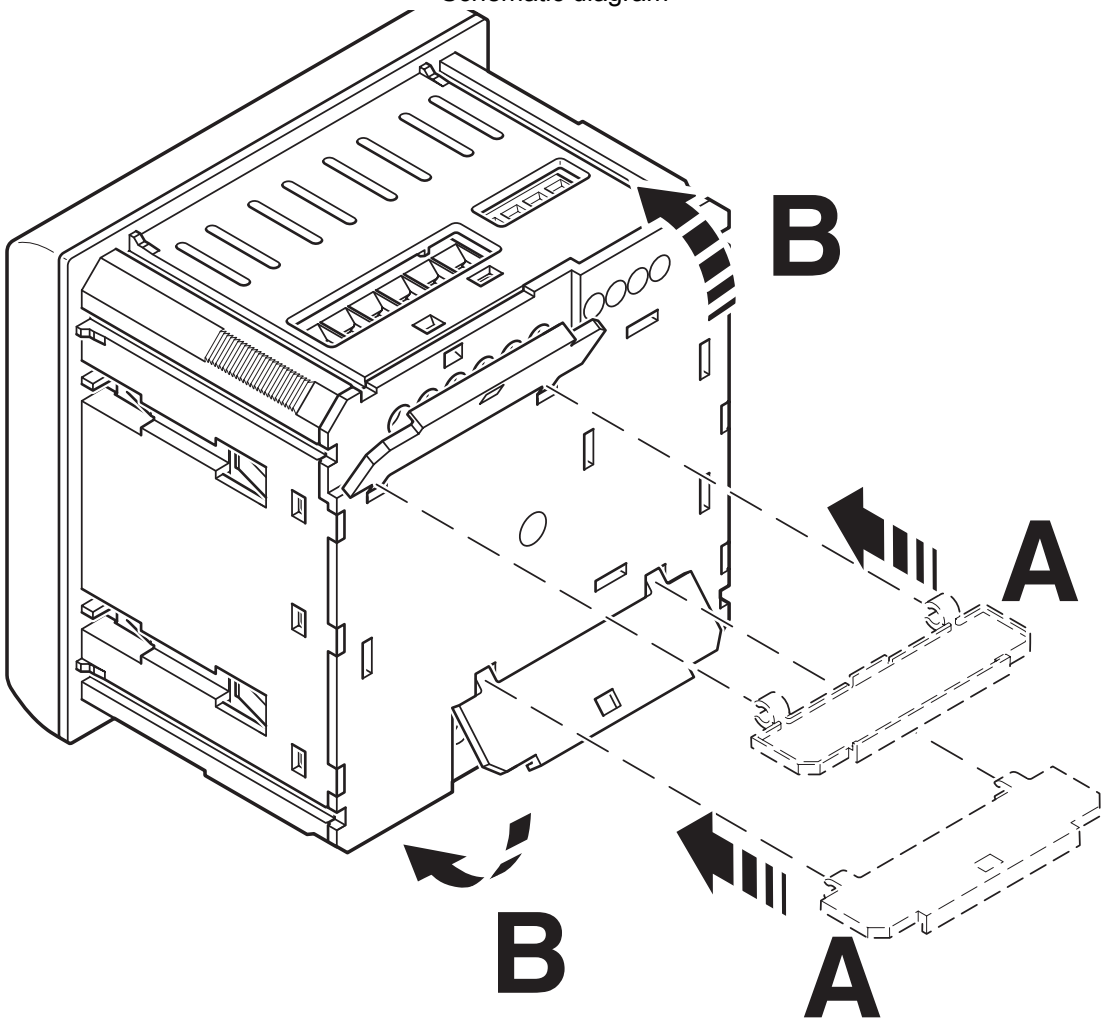

Mounting

Approvals

To download certificates, visit the product detail page: https://www.phoenixcontact.com/us/products/2907946

PROFINET
Approval ID: Z12426

cULus Listed
Approval ID: E357804-20191112

Classifications

ECLASS

ECLASS-13.0	27142330
ECLASS-15.0	27142330

ETIM

ETIM 10.0	EC002301

UNSPSC

UNSPSC 21.0	41113600

Environmental product compliance

EU RoHS

Fulfills EU RoHS substance requirements	Yes
Exemption	7(a), 7(c)-I

China RoHS

Environment friendly use period (EFUP)	EFUP-50
	An article-related China RoHS declaration table can be found in the download area for the respective article under "Manufacturer declaration". For all articles with EFUP-E, no China RoHS declaration table issued and required.

EU REACH SVHC

REACH candidate substance (CAS No.)	Lead(CAS: 7439-92-1)
	Perfluorobutane sulfonic acid (PFBS) and its salts(CAS: n/a)
	6,6'-di-tert-butyl-2,2'-methylenedi-p-cresol(CAS: 119-47-1)
SCIP	07dea559-2a6a-4abc-af12-198d5da0423c

Phoenix Contact 2026 © - all rights reserved
https://www.phoenixcontact.com

Phoenix Contact USA
586 Fulling Mill Road
Middletown, PA 17057, United States
(+717) 944-1300
info@phoenixcon.com