PLC-V8C/PT-24DC/SAM2 - Controller

2907443

https://www.phoenixcontact.com/us/products/2907443

Please be informed that the data shown in this PDF document is generated from our online catalog. Please find the complete data in the user documentation. Our general terms of use for downloads are valid.



PLC logic stand-alone module, Generation 2, with 16 I/Os, for plug-in connection to eight digital or analog PLC-INTERFACE terminal blocks, cannot be extended, real-time clock, micro USB female connector, accommodates memory module and Bluetooth adapter, Push-in connection

Commercial data

Item number	2907443
Packing unit	1 pc
Minimum order quantity	1 pc
Sales key	C424
Product key	DK2611
GTIN	4055626218182
Weight per piece (including packing)	94 g
Weight per piece (excluding packing)	130 g
Customs tariff number	85371098
Country of origin	DE

Technical data

Notes

Notes on operation	For proper use, the specifications of the installation directive (see Downloads) must be observed. For applications or use with third-party products, the specifications, and the safety and warning instructions of the respective third-party manufacturer must also be met.

Product properties

Product type	Base unit
Product family	PLC logic
Number of possible extension modules	0
Operating mode	100% operating factor

Insulation characteristics: Air clearances and creepage distances

Insulation	Basic insulation
Overvoltage category	III
Pollution degree	2

Electrical properties

Air clearances and creepage distances

Rated insulation voltage	50 V
Rated surge voltage	0.8 kV

Real-time clock

Real-time clock	yes
Buffer period	96 h (Capacitor)
Accuracy real-time clock	±2 s/d

Supply

Supply voltage	24 V DC
Supply voltage range	19.2 V DC ... 26.4 V DC
Typical input current at U_N	40 mA
Maximum input current at U_N	160 mA
Protective circuit	Reverse polarity protection
	Surge protection

Input data

Digital inputs

Number of inputs	≤ 8 (2 configurable as analog)
Description of the input	EN 61131-2, type 3
Input voltage	24 V DC
Signal level "0" signal	< 5 V
Signal level "1" signal	> 11 V

Input current "0" signal	< 1 mA
Input current "1" signal	2.5 mA
Status display	LED (yellow)

Analog inputs

Number of inputs	≤ 2 (IN6 and IN7 are configurable as analog)
Input voltage range	0 V ... 10 V
Input resistance	> 3.5 kΩ

Contact to PLC-INTERFACE

Number of inputs	≤ 8
Description of the input	technical data depends on the PLC-INTERFACE terminal block used
Input voltage	19 V DC
Typical current consumption	4 mA
Input resistance	< 100 mΩ

Output data

Number of outputs	≤ 8
Nominal output voltage	24 V DC
Nominal current	9 mA

Connection data

COMBICON connection

Connection method	Push-in connection
Stripping length	9 mm
Number of connections	1
Number of positions	10
Note	Device supply and 8 x inputs
Conductor cross-section rigid	0.14 mm² ... 1.5 mm²
Conductor cross-section flexible	0.14 mm² ... 1.5 mm²
	0.25 mm² ... 0.5 mm² (Ferrule with plastic sleeve)
	0.25 mm² ... 1.5 mm² (Ferrule without plastic sleeve)
Conductor cross-section AWG	26 ... 16

Programming connection

Connection method	Micro USB type B
Number of connections	1

Memory

Connection method	S-PORT (socket)
Number of connections	1
Number of positions	12
Note	For connecting the memory module

Signaling

Status display	LED (green)

Dimensions

Dimensional drawing	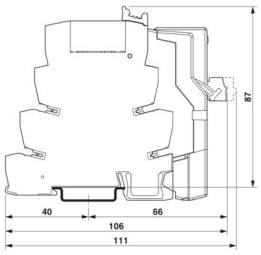
Width	50 mm
Height	48.5 mm
	111 mm (with relay)
Depth	82.5 mm
	87 mm (with relay)

Material specifications

Color	gray (RAL 7042)

Environmental and real-life conditions

Ambient conditions

Degree of protection	IP20
Ambient temperature (operation)	-20 °C ... 50 °C
Ambient temperature (storage/transport)	-20 °C ... 70 °C
Max. permissible relative humidity (operation)	95 %

Approvals

CE

Certificate	CE-compliant

UL, USA/Canada

Identification	Class I, Div. 2, Groups A, B, C, D T4

UL, Canada

Identification	Class I, Zone 2, Ex ec IIC Gc T4 X

UL, USA

Identification	Class I, Zone 2, AEx ec IIC T4

Standards and regulations

Air clearances and creepage distances

Standards/regulations	EN IEC 60664-1

Mounting

Mounting type	Plug-in mounting
Assembly note	can be plugged onto 8 x PLC-INTERFACE terminal blocks
Mounting position	any

Drawings

Dimensional drawing

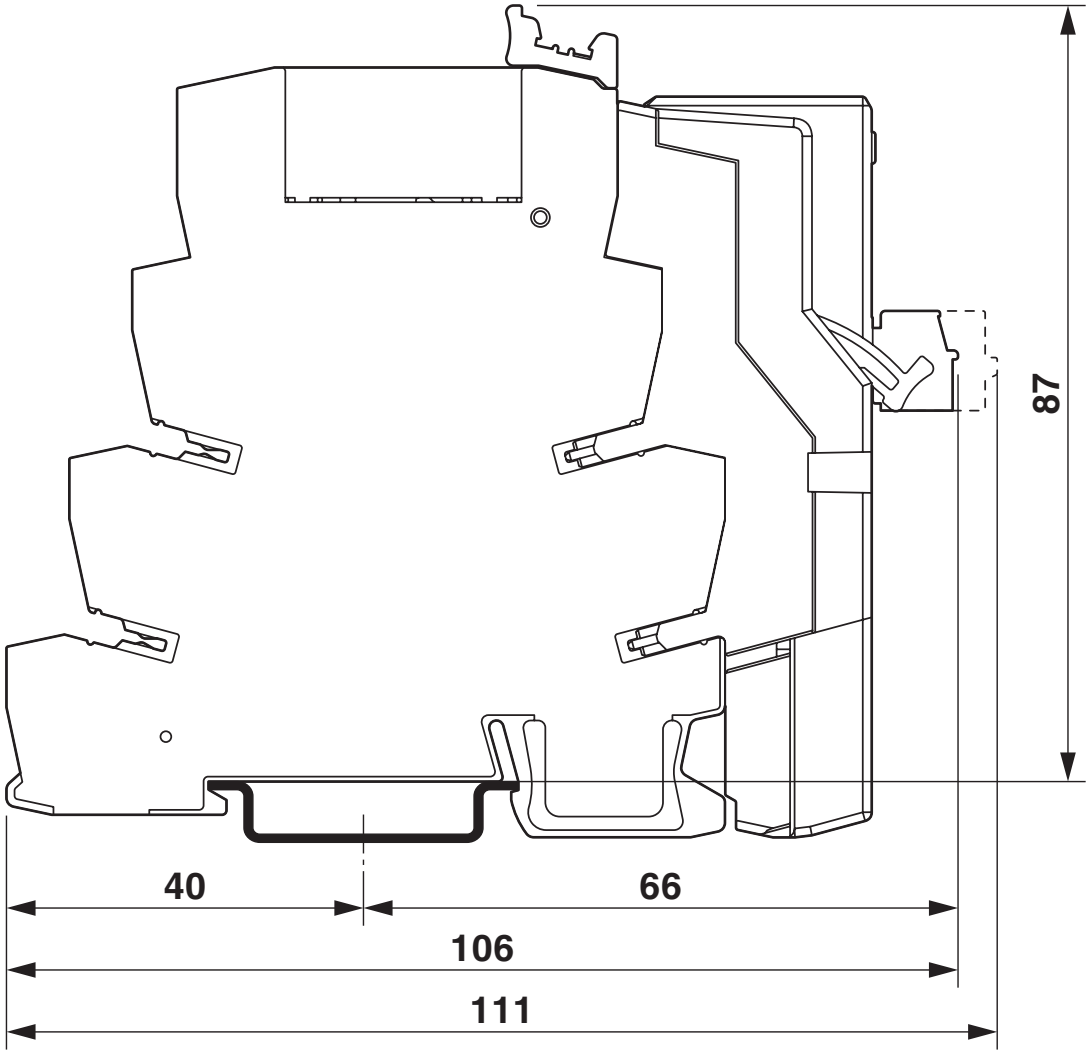

PLC logic with relay

Dimensional drawing

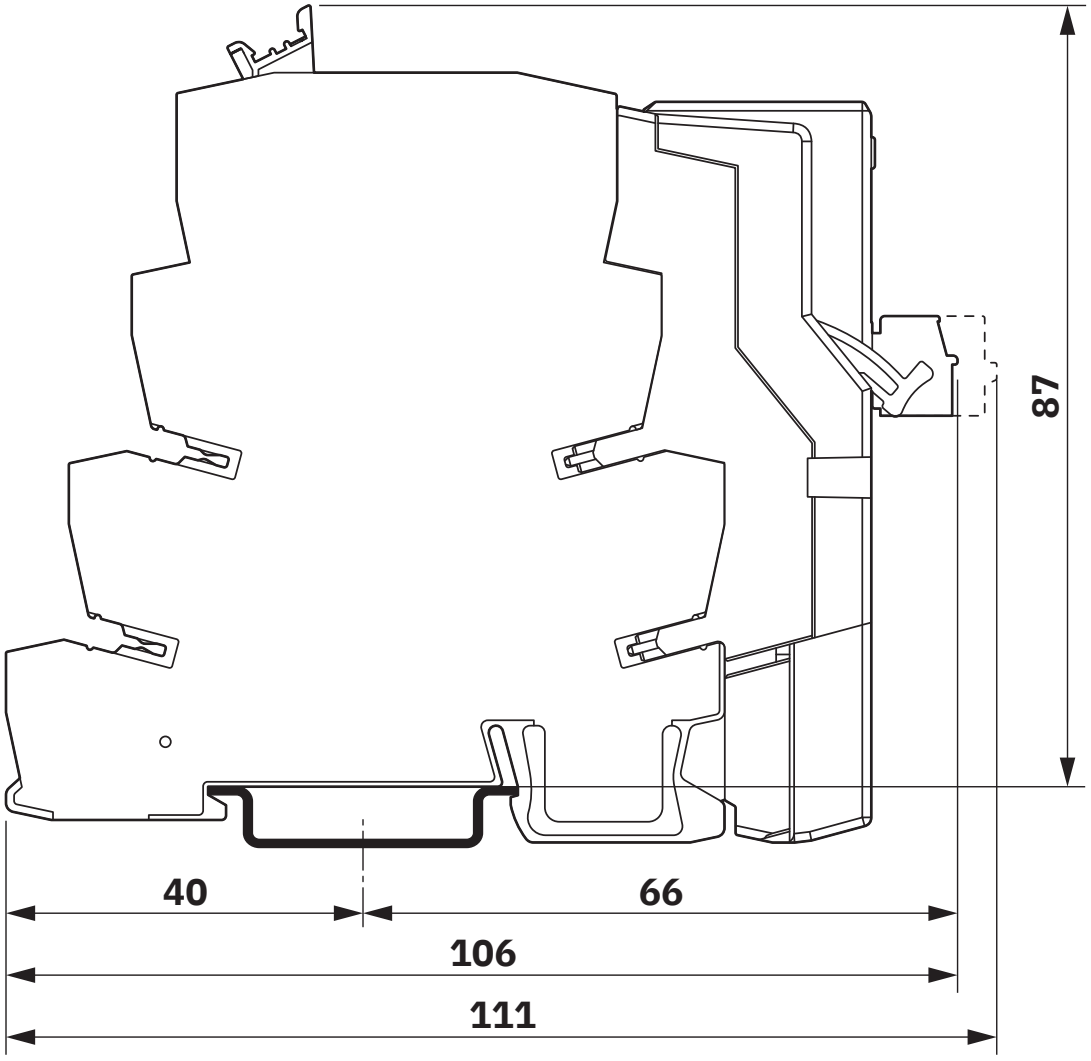

PLC logic with analogue terminals

Connection diagram

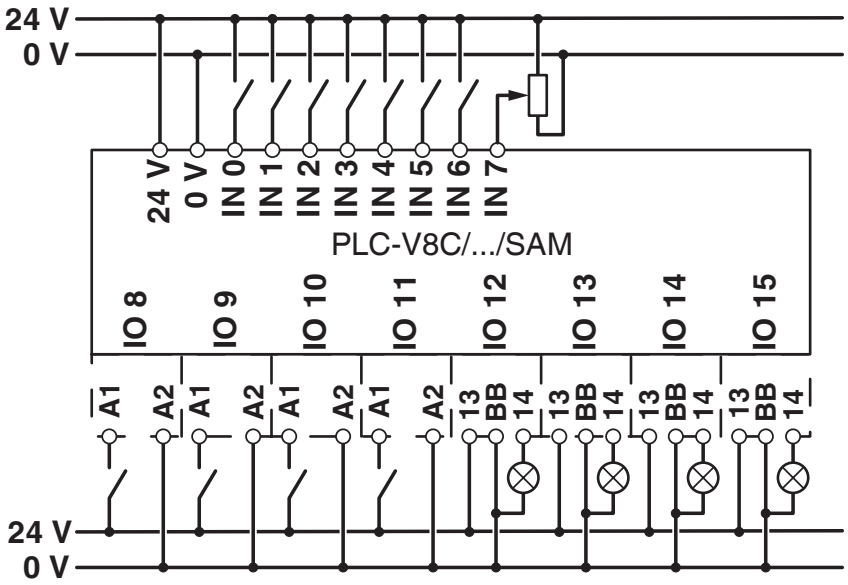

Circuit diagram

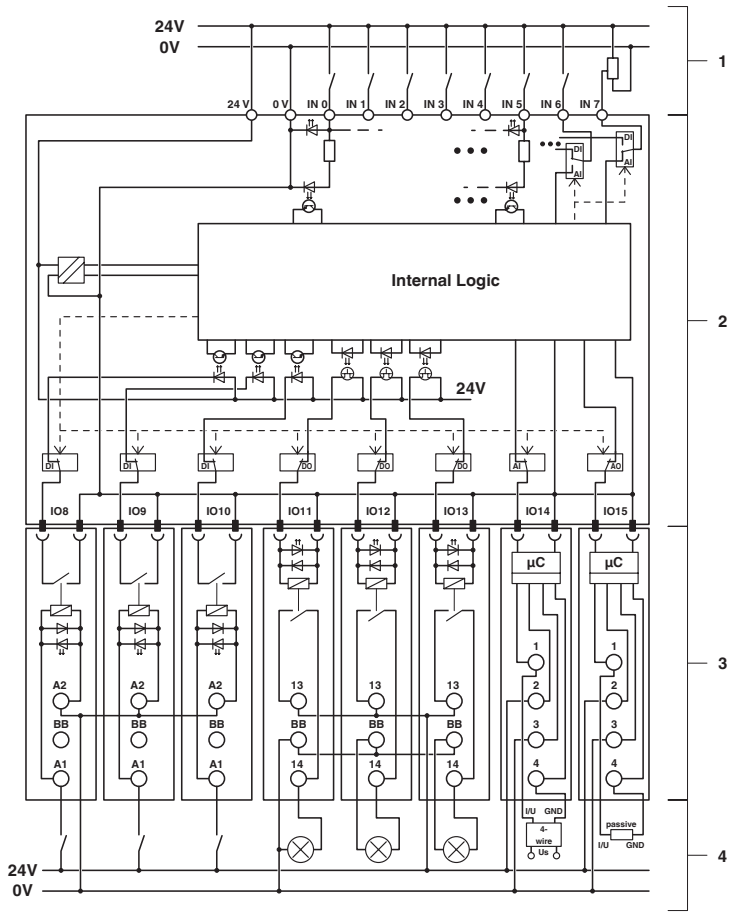

1 Field connection via COMBICON connector
2 PLC –V8C/…
3 PLC-INTERFACE terminal blocks
4 Field connection via PLC-INTERFACE terminal blocks

Circuit diagram

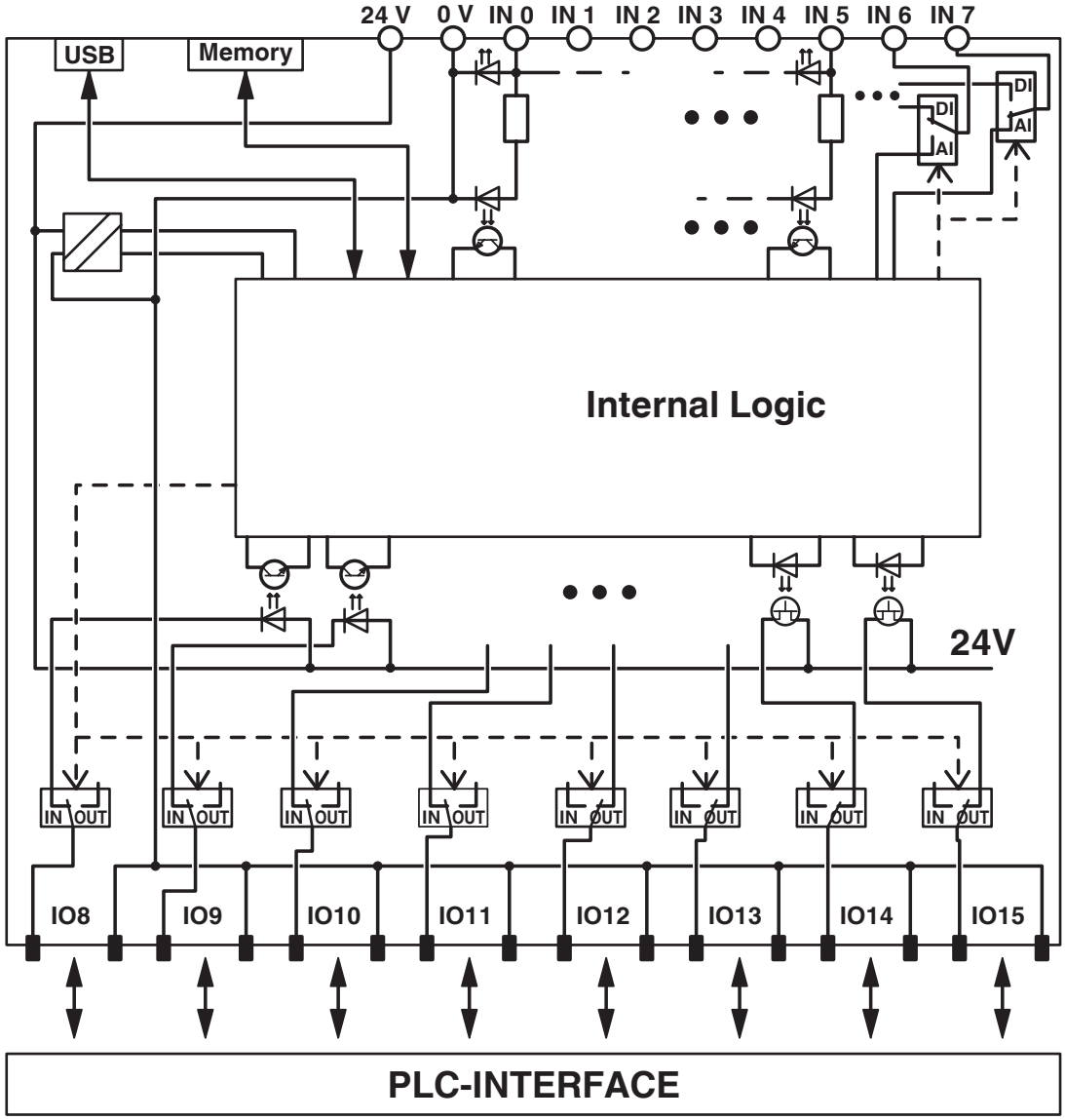

Circuit diagram

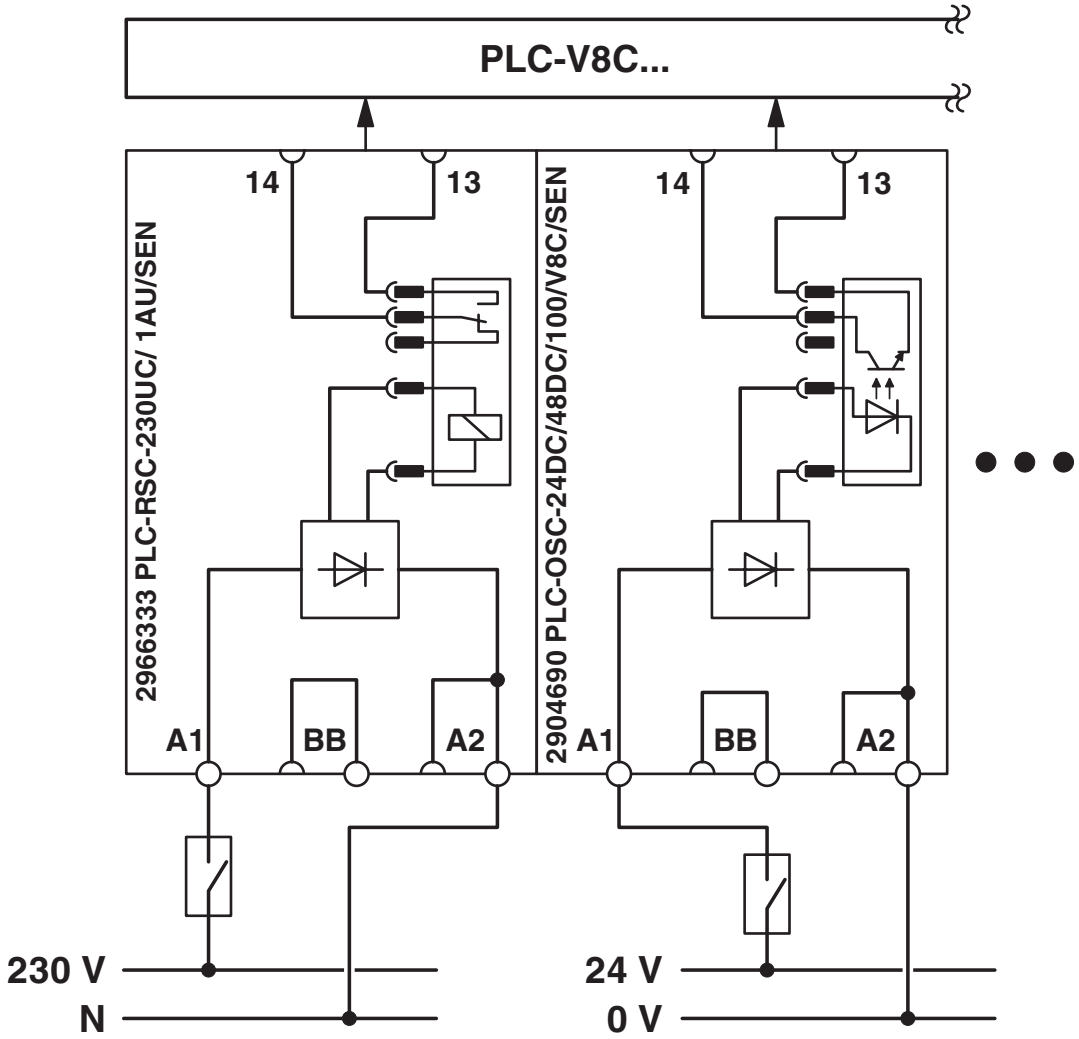

Basic circuit diagram: inputs via PLC-INTERFACE with the example of one input terminal block with relay (230 V AC) and one input terminal block with solid-state relay (24 V DC).

Circuit diagram

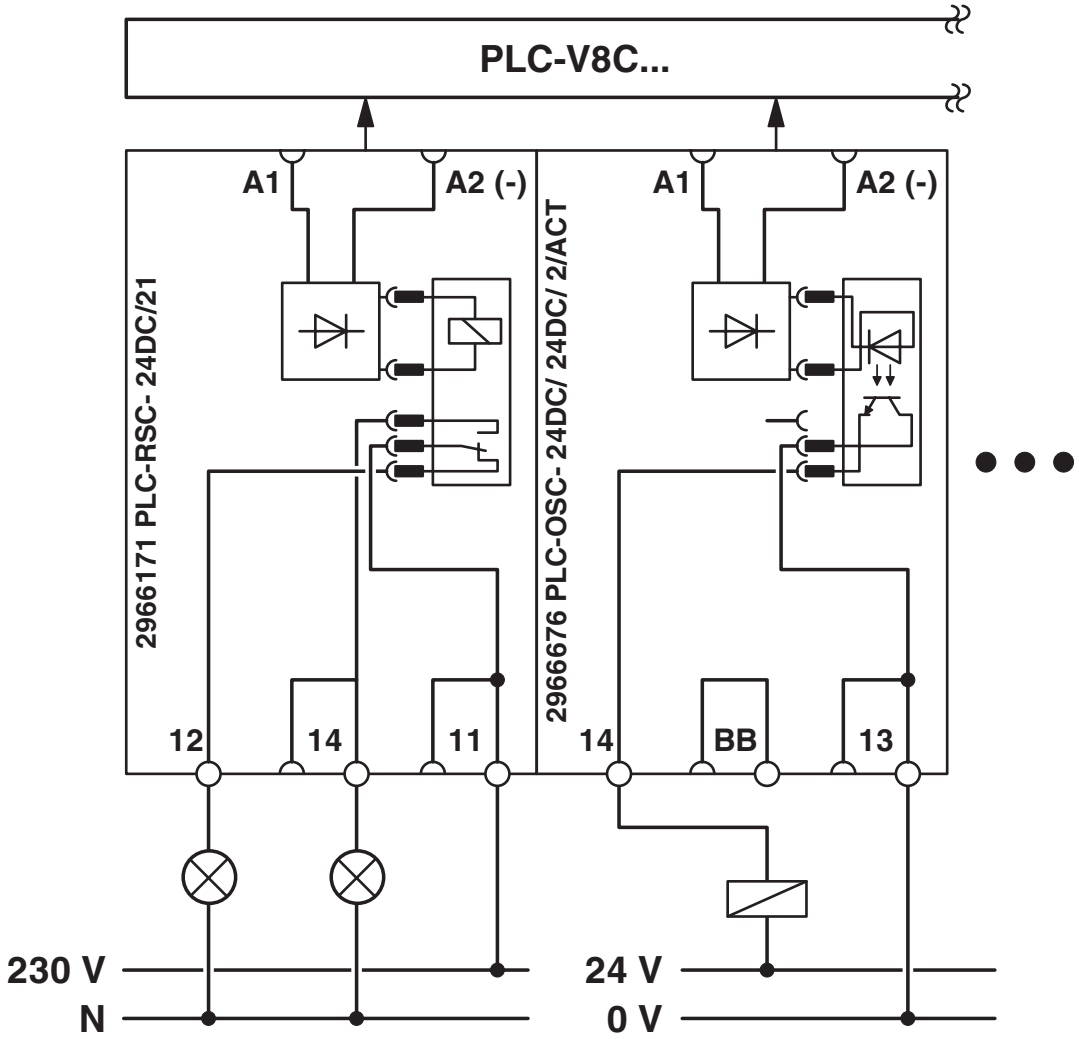

Basic circuit diagram: outputs via PLC-INTERFACE with the example of an output terminal block with relay, 1 changeover contact, and an output terminal block with solid-state relay.

Approvals

To download certificates, visit the product detail page: https://www.phoenixcontact.com/us/products/2907443

EAC
Approval ID: RU*DE.*08.B.01517/19

UL Listed
Approval ID: FILE E 172140

cUL Listed
Approval ID: FILE E 172140

cUL Listed
Approval ID: E199827

UL Listed
Approval ID: E199827

Classifications

ECLASS

ECLASS-13.0	27242216
ECLASS-15.0	27242216

ETIM

ETIM 10.0	EC001417

UNSPSC

UNSPSC 21.0	39122300

Environmental product compliance

EU RoHS

Fulfills EU RoHS substance requirements	Yes
Exemption	7(a), 7(c)-I

China RoHS

Environment friendly use period (EFUP)	EFUP-50
	An article-related China RoHS declaration table can be found in the download area for the respective article under "Manufacturer declaration". For all articles with EFUP-E, no China RoHS declaration table issued and required.

EU REACH SVHC

REACH candidate substance (CAS No.)	Lead(CAS: 7439-92-1)
SCIP	82e455c5-00a9-457c-8072-67b8f0606aa5

Phoenix Contact 2026 © - all rights reserved
https://www.phoenixcontact.com

Phoenix Contact USA
586 Fulling Mill Road
Middletown, PA 17057, United States
(+717) 944-1300
info@phoenixcon.com