# TRIO-UPS-2G/1AC/24DC/10 - Uninterruptible power supply

2907161

https://www.phoenixcontact.com/us/products/2907161

Please be informed that the data shown in this PDF document is generated from our online catalog. Please find the complete data in the user documentation. Our general terms of use for downloads are valid.

CRA-READY

TRIO DC UPS with integrated power supply, USB (Modbus/RTU), DIN rail mounting, Push-in connection, input: 1-phase, output: 24 V DC / 10 A. The product is being prepared for compliance with the Cyber Resilience Act (CRA).

## Product description

Supply DC loads reliably and save space with the TRIO uninterruptible power supplies. An input grid is no longer necessary for startup. Connected industrial PCs can be shut down easily via the integrated USB interface.

## Your advantages

- Space saving: Combination of UPS module and power supply in the same housing
- Long buffer times, thanks to large selection of VRLA energy storage systems
- USB interface for connection to higher-level controllers such as industrial PCs
- Startup from the energy storage system possible, even without mains input
- Universal range of possible applications, thanks to a comprehensive package of approvals and an extended temperature range
- Easy installation, thanks to push-in connection technology

ELEKTROGERÄTE RÜCKNAHME

## Commercial data

| | |
|---|---|
| Item number | 2907161 |

| | |
|---|---|
| Packing unit | 1 pc |
| Minimum order quantity | 1 pc |
| Sales key | CM25 |
| Product key | CMUO13 |
| GTIN | 4055626166582 |
| Weight per piece (including packing) | 1,598 g |
| Weight per piece (excluding packing) | 1,366.66 g |
| Customs tariff number | 85044095 |
| Country of origin | CN |

# Technical data

## Notes

### Note on application

| | |
|---|---|
| Note on application | As things stand now, we are preparing the product so that, as of December 11, 2027, it will comply with the requirements of the EU Cyber Resilience Act (CRA) based on the information currently available regarding the CRA. |

## Input data

### AC operation

| | |
|---|---|
| Input voltage range | 100 V AC ... 240 V AC -15 % ... +10 % |
| Voltage type of supply voltage | AC |
| Inrush current | < 9 A |
| Inrush current integral ($I^2t$) | < 0.2 $A^2s$ |
| Frequency range ($f_N$) | 50 Hz ... 60 Hz (±10 %) |
| Mains buffering time | ≥ 25 ms (120 V AC) |
| Switch-on time | typ. 200 ms |
| Typical current consumption | 4.5 A (100 V AC) |
| Input fuse | 6.3 A (slow-blow, internal) |

### DC operation

| | |
|---|---|
| Input voltage range | 110 V DC ... 250 V DC |
| Voltage type of supply voltage | DC |
| Typical current consumption | 4 A (110 V DC) |

## Output data

| | |
|---|---|
| Efficiency | typ. 90 % (120 V AC) |
| | typ. 91 % (230 V AC) |
| | typ. 96 % (Battery operation) |
| Derating | > 60 °C (2.5%/K of $P_{Out}$ nom.) |
| Crest factor | 1.5 (120 V AC) |
| | 1.5 (230 V AC) |
| Switch-over time | < 20 ms |
| UPS connection in parallel | yes, with diode module uncoupled |
| UPS connection in series | no |
| Energy storage device connection in parallel | yes |
| Feedback voltage resistance | ≤ 35 V DC |
| Protection against overvoltage at the output (OVP) | < 30 V DC |
| Residual ripple | < 20 mV |
| Control deviation | < 0.55 % (change in load, static 10 % ... 90 %) |
| | < 2.6 % (Dynamic load change 10 % ... 90 %, 10 Hz) |
| | < 0.05 % (change in input voltage ±10 %) |
| Rise time | < 30 ms |

| | |
|---|---|
| Permissible backup fuse | B10 |

Mains operation

| | |
|---|---|
| Output voltage | 24 V DC |
| Output voltage range | 24 V DC ... 28 V DC (> 24 V constant capacity) |
| Output current $I_N$ | 10 A |
| Dynamic BOOST ($I_{Dyn.Boost}$) | 15 A |
| Output power $P_{OUT}$ ($U_N$, $I_{OUT} = I_N$) | 240 W |
| Maximum no-load power dissipation | < 3 W (230 V AC) |
| Power loss nominal load max. | < 32 W (230 V AC) |

Battery operation

| | |
|---|---|
| Output voltage | $U_{BAT}$ -0.1 V DC |
| Output voltage range | 18 V DC ... 30 V DC |
| Output current $I_N$ | 10 A |
| Dynamic BOOST ($I_{Dyn.Boost}$) | 15 A |

## Energy storage

| | |
|---|---|
| Nominal voltage $U_N$ | 24 V DC |
| End-of-charge voltage | max. 30 V DC |
| Charging current (Configurable) | 0.2 A ... 3 A (-25 °C ... 40 °C) |
| Charging current (Reduced) | 3 A ... 0 A (40 °C ... 65 °C) |
| Charging current (Preset) | 2.1 A (-25 °C ... 40 °C) |
| Charging current (max.) | 3 A |
| Nominal capacity range | 1.2 Ah ... 40 Ah |
| Battery technology | VRLA-AGM |
| Charge characteristic curve | $IU_0U$ |

## Connection data

Conductor connection

| | |
|---|---|
| Connection method | Push-in connection |
| rigid | 0.2 mm² ... 4 mm² |
| flexible | 0.2 mm² ... 2.5 mm² |
| flexible with ferrule without plastic sleeve | 0.25 mm² ... 2.5 mm² |
| flexible with ferrule with plastic sleeve | 0.25 mm² ... 1.5 mm² |
| AWG | 24 ... 12 |
| Stripping length | 10 mm |

Conductor connection

| | |
|---|---|
| Connection method | Push-in connection |
| rigid | 0.2 mm² ... 4 mm² |
| flexible | 0.2 mm² ... 2.5 mm² |
| flexible with ferrule without plastic sleeve | 0.25 mm² ... 2.5 mm² |
| flexible with ferrule with plastic sleeve | 0.25 mm² ... 1.5 mm² |
| AWG | 24 ... 12 |

| | |
|---|---|
| Stripping length | 10 mm |

Conductor connection

| | |
|---|---|
| Connection method | Push-in connection |
| rigid | 0.2 mm² ... 1.5 mm² |
| flexible | 0.2 mm² ... 1.5 mm² |
| flexible with ferrule without plastic sleeve | 0.2 mm² ... 1.5 mm² |
| flexible with ferrule with plastic sleeve | 0.2 mm² ... 0.75 mm² |
| AWG | 24 ... 16 |
| Stripping length | 8 mm |

Conductor connection

| | |
|---|---|
| Connection method | Push-in connection |
| rigid | 0.2 mm² ... 10 mm² |
| flexible | 0.2 mm² ... 6 mm² |
| flexible with ferrule without plastic sleeve | 0.25 mm² ... 6 mm² |
| flexible with ferrule with plastic sleeve | 0.25 mm² ... 4 mm² |
| AWG | 24 ... 8 |
| Stripping length | 15 mm |

## Interfaces

| | |
|---|---|
| Interface | USB (Modbus/RTU) |
| Number of interfaces | 1 |
| Connection method | MINI-USB Type B |
| Locking | Screw |

## Signaling

Signal input Remote

| | |
|---|---|
| Connection labeling | 3.5 |
| Signalization designation | Remote |
| Low signal | Connection to SGnd with < 2.7 kΩ |
| High signal | Open (> 35 kΩ between Remote and SGnd) |

Signal input Bat.-Start

| | |
|---|---|
| Connection labeling | 3.6 |
| Signalization designation | Bat.-Start |
| Low signal | Connection to SGnd with < 2.7 kΩ |
| High signal | Open (> 200 kΩ between Bat.-Start and SGnd) |

Signal output DC OK

| | |
|---|---|
| Connection labeling | 3.1 |
| Signalization designation | DC OK |
| Type of signaling | Green LED |
| Switching output | Transistor output, active |
| Output voltage | 24 V DC |

| | |
|---|---|
| Continuous load current | 20 mA |
| LED status indicator | green |

Signal output Alarm

| | |
|---|---|
| Connection labeling | 3.2 |
| Signalization designation | Alarm |
| Type of signaling | LED red |
| Switching output | Transistor output, active |
| Output voltage | 24 V DC |
| Continuous load current | 20 mA |
| LED status indicator | red |

Signal output Battery Mode

| | |
|---|---|
| Connection labeling | 3.3 |
| Signalization designation | Battery mode |
| Type of signaling | Yellow LED |
| Switching output | Transistor output, active |
| Output voltage | 24 V DC |
| Continuous load current | 20 mA |
| LED status indicator | yellow |

Signal output Ready

| | |
|---|---|
| Connection labeling | 3.4 |
| Signalization designation | Ready |
| Switching output | Transistor output, active |
| Output voltage | 24 V DC |
| Continuous load current | 20 mA |

## Electrical properties

| | |
|---|---|
| Number of phases | 1 |
| Insulation voltage input/output | 4 kV AC (type test) |
| | 2 kV AC (routine test) |
| Insulation voltage output / PE | 500 V AC |
| | 500 V AC (routine test) |
| Insulation voltage input / PE | 3.5 kV AC (type test) |
| | 2 kV AC (routine test) |

## Product properties

| | |
|---|---|
| Product type | DC UPS with integrated power supply |
| Product family | TRIO DC UPS with integrated power supply |
| MTBF (IEC 61709, SN 29500) | > 2007013 h (230 V AC, at 25 °C) |
| | > 1210518 h (230 V AC, at 40 °C) |
| | > 575978 h (230 V AC, at 60 °C) |
| Special properties | The product is being prepared for compliance with the Cyber Resilience Act (CRA) |

Insulation characteristics

| | |
|---|---|
| Protection class | I |
| Overvoltage category (EN 61010-1) | II |
| Degree of pollution | 2 |

Life expectancy (electrolytic capacitors)

| | |
|---|---|
| Current | 10 A |
| Temperature | 40 °C |
| Time | 73005 h |
| Additional text | 230 V AC |

## Dimensions

Item dimensions

| | |
|---|---|
| Width | 68 mm |
| Height | 130 mm |
| Depth | 160 mm |

Installation dimensions

| | |
|---|---|
| Installation distance right/left | 0 mm / 0 mm |
| Installation distance top/bottom | 50 mm / 50 mm |

## Mounting

| | |
|---|---|
| Mounting type | DIN rail mounting |
| Assembly note | alignable: horizontally 0 mm, vertically 50 mm |
| Mounting position | horizontal DIN rail NS 35, EN 60715 |

## Material specifications

| | |
|---|---|
| Flammability rating according to UL 94 (housing / terminal blocks) | V0 |
| Housing material | Metal |
| Hood version | PC |
| Side element version | Aluminum |

## Environmental and real-life conditions

Ambient conditions

| | |
|---|---|
| Degree of protection | IP20 |
| Ambient temperature (operation) | -25 °C ... 70 °C (> 60 °C Derating: 2,5 %/K) |
| Ambient temperature (storage/transport) | -40 °C ... 85 °C |
| Ambient temperature (start-up type tested) | -40 °C |
| Maximum altitude | ≤ 4000 m (> 2000 m, observe derating) |
| Climatic class | 3K3 (in acc. with EN 60721) |
| Max. permissible relative humidity (operation) | ≤ 93 % (at +25 °C, non-condensing) |
| Shock | 30g, 18 ms in accordance with IEC 60068-2-27 |

| | |
|---|---|
| Vibration (operation) | < 12 ... 13.2 Hz, amplitude ±1 mm, 13.2 ... 100 Hz, 0.7g in accordance with IEC 60068-2-6 |

## Standards and regulations

Safety for measurement, control, and laboratory equipment

| | |
|---|---|
| Standard designation | Safety for equipment for measurement, control, and laboratory use |
| Standards/specifications | IEC 61010-1 |

Safety extra-low voltage

| | |
|---|---|
| Standard designation | Safety extra-low voltage |
| Standards/specifications | IEC 61010-1 (SELV) |

Protective extra-low voltage

| | |
|---|---|
| Standard designation | Protective extra-low voltage |
| Standards/specifications | IEC 61010-2-201 (PELV) |

Safe isolation

| | |
|---|---|
| Standard designation | Safe isolation |
| Standards/specifications | DIN VDE 0100-410 |

Low-voltage power supplies, DC output

| | |
|---|---|
| Standard designation | Low-voltage power supplies, DC output |
| Standards/specifications | EN 61204-3 |

Ship’s bridge

| | |
|---|---|
| Standard designation | Ship’s bridge |
| Standards/specifications | IEC/EN 60945 |

## Approvals

UL

| | |
|---|---|
| Identification | UL Listed UL 61010 |

UL

| | |
|---|---|
| Identification | UL/C-UL Listed ANSI/ISA-12.12.01 Class I, Division 2, Groups A, B, C |

Shipbuilding

| | |
|---|---|
| Identification | DNV |

Shipbuilding

| | |
|---|---|
| Identification | LR |

## EMC data

| | |
|---|---|
| Electromagnetic compatibility | Conformance with EMC Directive 2014/30/EU |
| Low Voltage Directive | Conformance with Low Voltage Directive 2014/35/EC |
| EMC requirements for noise emission | EN 61000-6-3 |
| | EN 61000-6-4 |

| | |
|---|---|
| EMC requirements for noise immunity | EN 61000-6-1 |
| | EN 61000-6-2 |
| Noise immunity | Immunity in accordance with EN 61000-6-2 (industrial) |

Conducted noise emission

| | |
|---|---|
| Standards/regulations | EN 61000-6-3 |

Noise emission

| | |
|---|---|
| Standards/regulations | EN 61000-6-3 |

DNV GL conducted noise emissions

| | |
|---|---|
| DNV | Class B |
| Additional text | Area power distribution |

DNV GL noise radiation

| | |
|---|---|
| DNV | Class B |
| Additional text | Bridge and deck area |

Harmonic currents

| | |
|---|---|
| Standards/regulations | EN 61000-3-2 |

Flicker

| | |
|---|---|
| Standards/regulations | EN 61000-3-3 |

Electrostatic discharge

| | |
|---|---|
| Standards/regulations | EN 61000-4-2 |

Electrostatic discharge

| | |
|---|---|
| Contact discharge | 6 kV (Test Level 3) |
| Discharge in air | 8 kV (Test Level 3) |

Electromagnetic HF field

| | |
|---|---|
| Standards/regulations | EN 61000-4-3 |

Electromagnetic HF field

| | |
|---|---|
| Frequency range | 80 MHz ... 6 GHz |
| Test field strength | 10 V/m |
| Frequency range | 1.4 GHz ... 6 GHz |
| Test field strength | 3 V/m |

Fast transients (burst)

| | |
|---|---|
| Standards/regulations | EN 61000-4-4 |

Fast transients (burst)

| | |
|---|---|
| Input | 4 kV |
| Output | 2 kV |
| Signal | 2 kV |

Surge voltage load (surge)

| | |
|---|---|
| Standards/regulations | EN 61000-4-5 |

Surge voltage load (surge)

| | |
|---|---|
| Input | 2 kV (Test Level 4 - symmetrical) |
| | 4 kV (Test Level 4 - asymmetrical) |
| Output | 1 kV (Test Level 3 - symmetrical) |
| | 2 kV (Test Level 3 - asymmetrical) |
| Signal | 1 kV (Test Level 2 - asymmetrical) |

Conducted interference

| | |
|---|---|
| Standards/regulations | EN 61000-4-6 |

Conducted interference

| | |
|---|---|
| Frequency range | 0.15 MHz ... 80 MHz |
| Voltage | 10 V |

Attenuated sinusoidal oscillations (ring wave)

| | |
|---|---|
| Standards/regulations | EN 61000-4-12 |
| Comments | Criterion A |

## Drawings

Schematic diagram

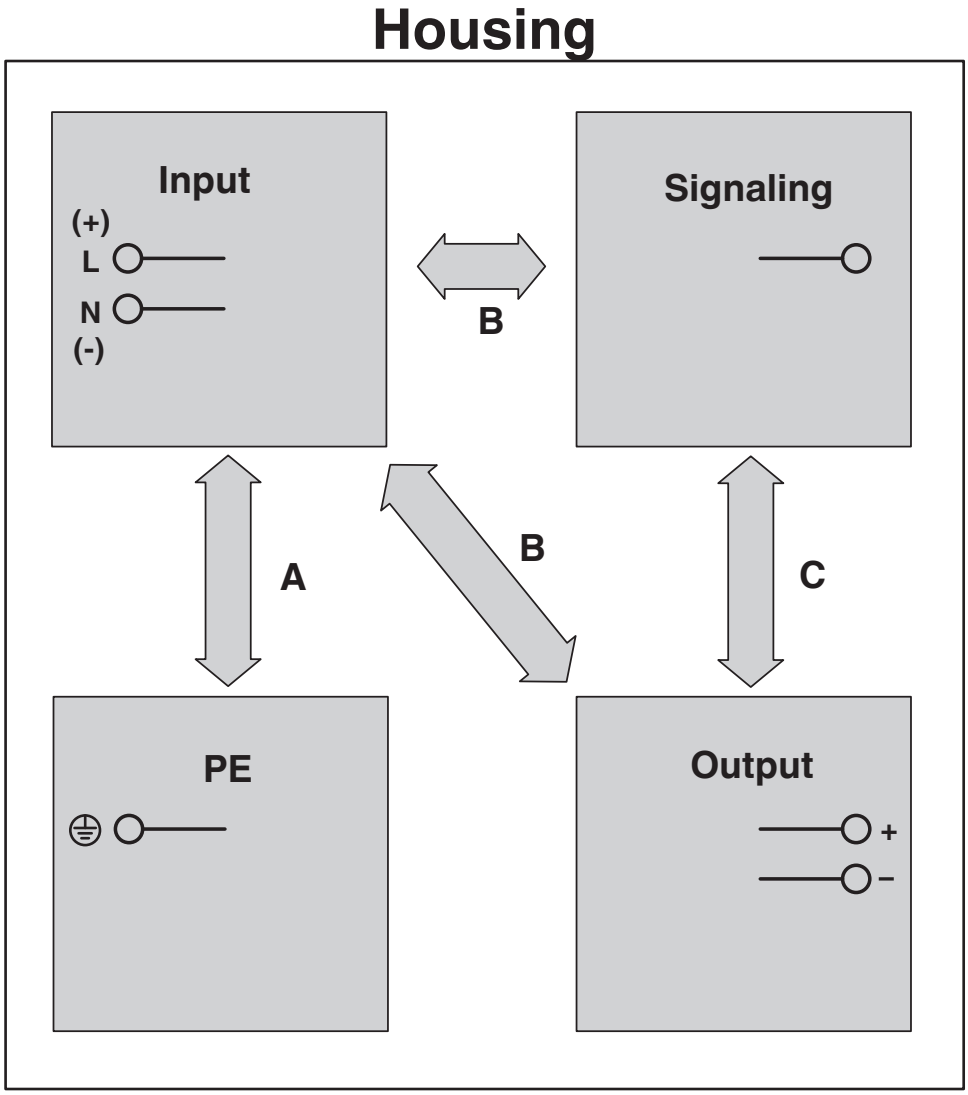


Insulation electric strength

Block diagram

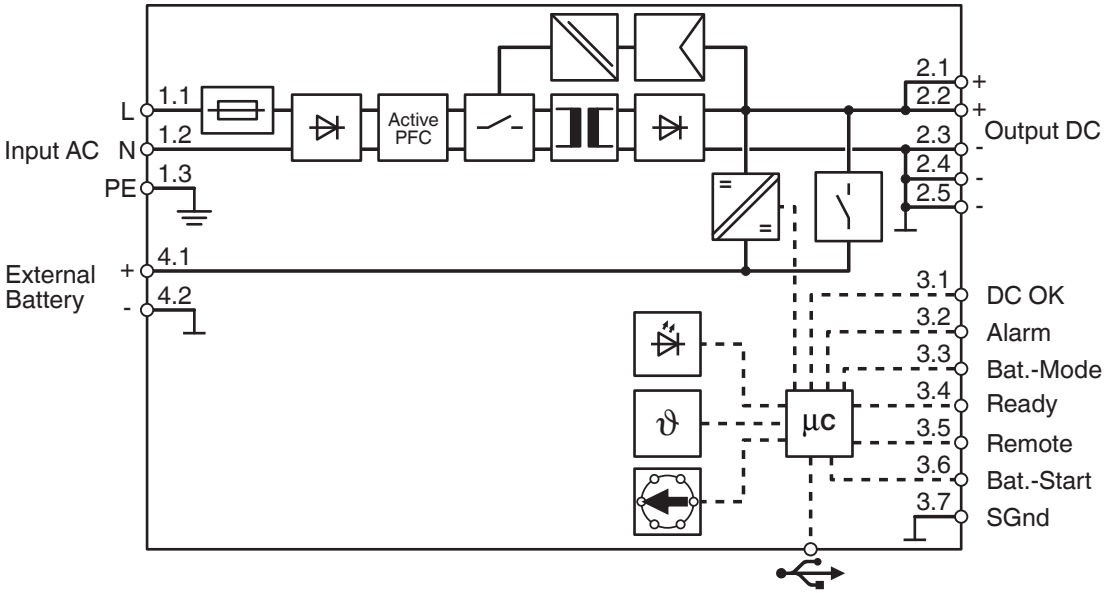


Block diagram

Graphic

| Load Current | Buffertime | | | | | | | | | | | | | | | | | | |
|---|---|---|---|---|---|---|---|---|---|---|---|---|---|---|---|---|---|---|---|
| | Minutes | | | | | | | | | | | | | Hours | | | | | |
| | 1 | 2 | 3 | 5 | 7 | 8 | 9 | 10 | 20 | 30 | 40 | 45 | 50 | 1 | 2 | 3 | 5 | 8 | 10 |
| 1 A | | | | | | | | | | | | | | | | | | | |
| 2 A | | | | | | | | | | | | | | | | | | | |
| 3 A | | | | | | | | | | | | | | | | | | | |
| 5 A | | | | | | | | | | | | | | | | | | | |
| 7 A | | | | | | | | | | | | | | | | | | | |
| 10 A | | | | | | | | | | | | | | | | | | | |
| 15 A | | | | | | | | | | | | | | | | | | | |
| 20 A | | | | | | | | | | | | | | | | | | | |

The data is based on an ambient temperature of +25 °C at the start of use.

**1394729** TRIO-BAT/PB/24DC/1.2AH

**1384031** TRIO-BAT/PB/24DC/7AH

**1394730** TRIO-BAT/PB/24DC/4AH

**1394727** TRIO-BAT/PB/24DC/12AH

TRIO-UPS-2G buffer times for TRIO battery modules

## Graphic

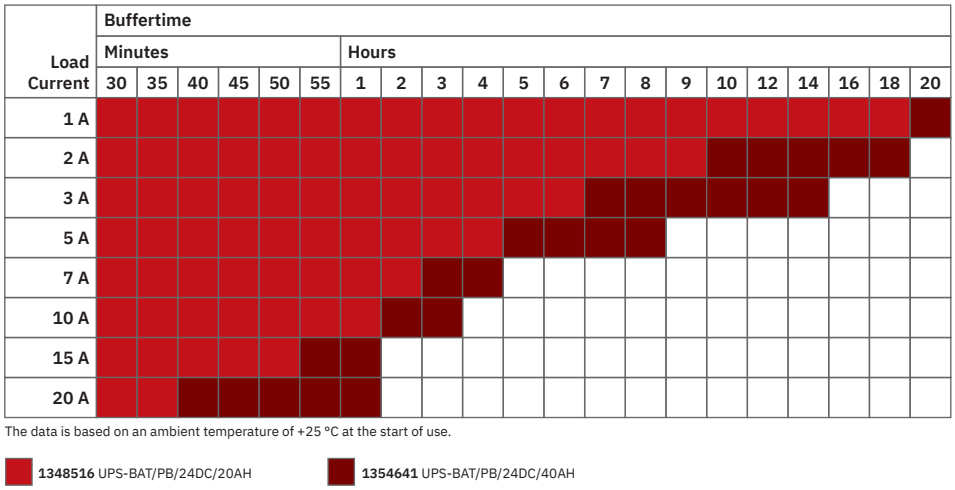


TRIO-UPS-2G buffer times for lead battery modules

## Graphic

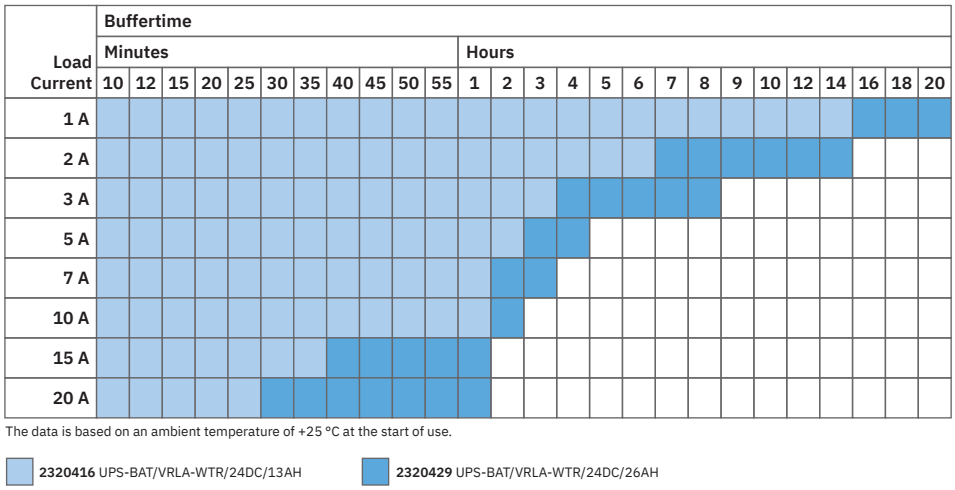


TRIO-UPS-2G buffer times for VRLA-WTR battery modules

## Approvals

To download certificates, visit the product detail page: https://www.phoenixcontact.com/us/products/2907161

**DNV**
Approval ID: TAA00000BM

**IECEE CB Scheme**
Approval ID: DK-67494-UL

**EAC**
Approval ID: RU S-DE.BL08.W.00764

**LR**
Approval ID: LR21417906TA-01

**EAC**
Approval ID: RU S-DE.BL08.W.00764

**UL Listed**
Approval ID: E123528

**cUL Listed**
Approval ID: E123528

**BSH**
Approval ID: 1025a

**KC**
Approval ID: R-R-PCK-2907161

**IECEE CB Scheme**
Approval ID: DK-67494-UL

**cUL Listed**
Approval ID: E123528

**UL Listed**
Approval ID: E123528

**BSH**
Approval ID: 1025a

**LR**
Approval ID: LR21417906TA-01

**EAC**
Approval ID: RU-DE.B.00184/20

**EAC**
Approval ID: RU-DE.B.00184/20

**KC**
Approval ID: R-R-PCK-2907161

**DNV**
Approval ID: TAA00000BM

**NK**
Approval ID: TA26283M

**NK**
Approval ID: TA26283M

**cUL Listed**
Approval ID: E199827

**UL Listed**
Approval ID: E199827

**UL Listed**
Approval ID: E199827

**cUL Listed**
Approval ID: E199827

## Classifications

### ECLASS

| | |
|---|---|
| ECLASS-13.0 | 27040705 |
| ECLASS-15.0 | 27040705 |

### ETIM

| | |
|---|---|
| ETIM 10.0 | EC000382 |

### UNSPSC

| | |
|---|---|
| UNSPSC 21.0 | 39121000 |

## Environmental product compliance

EU RoHS

| | |
|---|---|
| Fulfills EU RoHS substance requirements | Yes |
| Exemption | 7(a), 7(c)-I |

China RoHS

| | |
|---|---|
| Environment friendly use period (EFUP) | EFUP-25 |
| | An article-related China RoHS declaration table can be found in the download area for the respective article under "Manufacturer declaration". For all articles with EFUP-E, no China RoHS declaration table issued and required. |

EU REACH SVHC

| | |
|---|---|
| REACH candidate substance (CAS No.) | Lead(CAS: 7439-92-1) |
| SCIP | dc76d433-c225-4fef-af18-1e51fbf35b5d |

EF3.1 Climate Change

| | |
|---|---|
| CO2e kg | 68.3 kg CO2e |

Phoenix Contact 2026 © - all rights reserved
https://www.phoenixcontact.com

Phoenix Contact USA
586 Fulling Mill Road
Middletown, PA 17057, United States
(+717) 944-1300
info@phoenixcon.com