TTC-6-2X1-24DC-UT - Surge protection device

2906799

https://www.phoenixcontact.com/us/products/2906799

Please be informed that the data shown in this PDF document is generated from our online catalog. Please find the complete data in the user documentation. Our general terms of use for downloads are valid.





Surge protection for two signal wires with common reference potential, e.g., Digital IN/OUT. Can be used in safety-related circuits up to SIL 3.

Your advantages

- Space saving with a narrow overall width of just 6 mm
- Cost-optimized with tailored product features
- Easy selection for all possible demands in MCR applications with a complete product portfolio

ELEKTROGERÄTE RÜCKNAHME

Commercial data

Item number	2906799
Packing unit	1 pc
Minimum order quantity	1 pc
Sales key	CL23
Product key	CL2261
GTIN	4055626135540
Weight per piece (including packing)	39.1 g
Weight per piece (excluding packing)	39 g

Customs tariff number	85363010
Country of origin	DE

Technical data

Product properties

Product type	Surge protection for MCR technology
Product family	TERMITRAB complete
IEC test classification	C1
	C2
	C3
	D1
Type	DIN rail module, one-piece

Insulation characteristics

Overvoltage category	III
Pollution degree	2

Electrical properties

Nominal voltage U_N	24 V DC

Connection data

Connection method	Screw connection
Screw thread	M3
Tightening torque	0.5 Nm ... 0.6 Nm
Conductor cross-section flexible	0.2 mm² ... 2.5 mm²
Conductor cross-section rigid	0.2 mm² ... 4 mm²
Conductor cross-section AWG	24 ... 12

Dimensions

Dimensional drawing	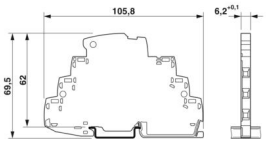
Width	6.2 mm +0.1 mm
Height	105.8 mm
Depth	69.5 mm (incl. DIN rail 7.5 mm)

Material specifications

Color	gray (RAL 7042)
	light gray (RAL 7035)
Flammability rating according to UL 94	V-0
Insulating material	PBT
Housing material	PBT

Mechanical properties

Mechanical data

Open side panel	No

Protective circuit

Direction of action	Line-Line & Line-Signal Ground/Shield & optional Signal Ground/Shield-Earth Ground
Nominal voltage U_N	24 V DC
Maximum continuous operating voltage U_C	30 V DC
	21 V AC
Rated current	600 mA (40 °C)
Operating effective current I_C at U_C	≤ 5 µA
Protective conductor current I_{PE}	≤ 10 µA
Nominal discharge current I_n (8/20) µs (line-ground)	5 kA
Pulse discharge current I_{imp} (10/350) µs (line-earth)	0.5 kA
Total discharge current I_{Total} (8/20) µs	10 kA
Voltage protection level U_p (line-earth)	≤ 140 V (C1 - 1 kV / 500 A)
	≤ 130 V (C2 - 10 kV / 5 kA)
	≤ 45 V (C3 - 25 A)
	≤ 50 V (C3 - 100 A)
Voltage protection level U_p static (line-earth)	≤ 55 V (C1 - 1 kV / 500 A)
	≤ 80 V (C2 - 10 kV / 5 kA)
Response time t_A (line-earth)	≤ 1 ns
Input attenuation aE, asym.	typ. 0.3 dB (≤ 270 kHz/150 Ω)
	typ. 0.3 dB (≤ 407 kHz / 100 Ω)
Cut-off frequency fg (3 dB), asym. (PE) in 100 Ω system	typ. 1280 kHz
Cut-off frequency fg (3 dB), asym. (PE) in 150 Ω system	typ. 960 kHz
Capacity (Core-Earth)	typ. 2.2 nF
Resistance per path	1.65 Ω ±20 %
Surge protection fault message	none
Max. required back-up fuse	630 mA (FF)
Impulse durability (line-earth)	C1 - 1 kV / 500 A
	C2 - 10 kV / 5 kA
	C3 - 100 A
	D1 - 500 A
Pulse reset time (line-earth)	≤ 300 ms

Additional technical data

Max. total discharge current $I_{total\ max}$ (8/20) µs	20 kA (1x)

Environmental and real-life conditions

Ambient conditions

Degree of protection	IP20
Ambient temperature (operation)	-40 °C ... 85 °C
Ambient temperature (storage/transport)	-40 °C ... 85 °C

Altitude	≤ 4000 m (amsl)
Permissible humidity (operation)	5 % ... 95 %

Approvals

Conformity/Approvals

UL, USA / Canada	Class I, Div. 2, Groups A, B, C, D T4

Standards and regulations

Standards/specifications	IEC 61643-21
Note	2000 + corrigendum 2001 + A1:2008, modified + A2:2012

EN 61643-21

Standards/specifications	EN 61643-21
Note	2001 + A1:2009 + A2:2013

Mounting

Mounting type	DIN rail: TH 35 - 7.5 mm

Drawings

Dimensional drawing

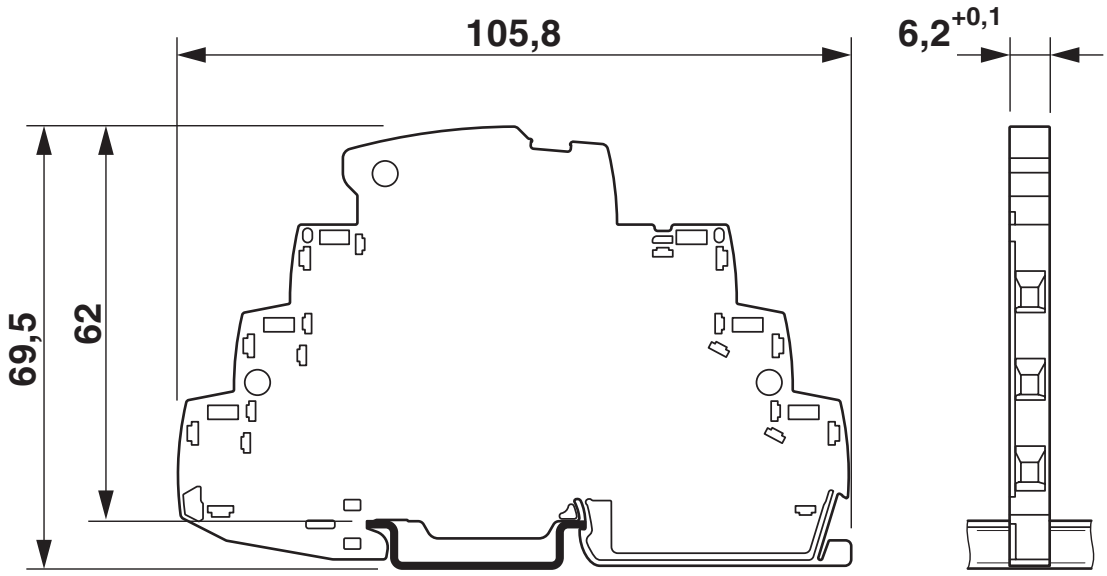

Schematic diagram

TTC-6-2X1-...									
Category	1oo1 architecture, HFT=0				1oo2 architecture, HFT=1				
	PFD_{AVG}	PFH	Used budget of SIL 2 SIF		PFD_{AVG}	PFH	CCF	Used budget of SIL 3 SIF	
			PFD_{AVG}	PFH				PFD_{AVG}	PFH
	$1.69_{x10^{-5}}$	$3.00_{x10^{-9}}$ 1/h	0.2 %	0.3 %	$8.44_{x10^{-7}}$	$1.50_{x10^{-10}}$ 1/h	5 %	0.1 %	0.2 %
					$1.69_{x10^{-6}}$	$3.00_{x10^{-10}}$ 1/h	10 %	0.2 %	0.3 %
	Calculation based on exida report, Phoenix Contact 16/06-072 R023 V3R1 exida Profile 1, FMEDA Analysis 2, T_{proof}: 1 year, MT: 10 years, MTTR: 24 hours, PTC: 99% Used standards IEC/EN 61508, edition 2010 (device specific) IEC/EN 61511, edition 2016 + COR1:2016 + A1:2017 (system specific)								

Functional safety scenarios

Diagram

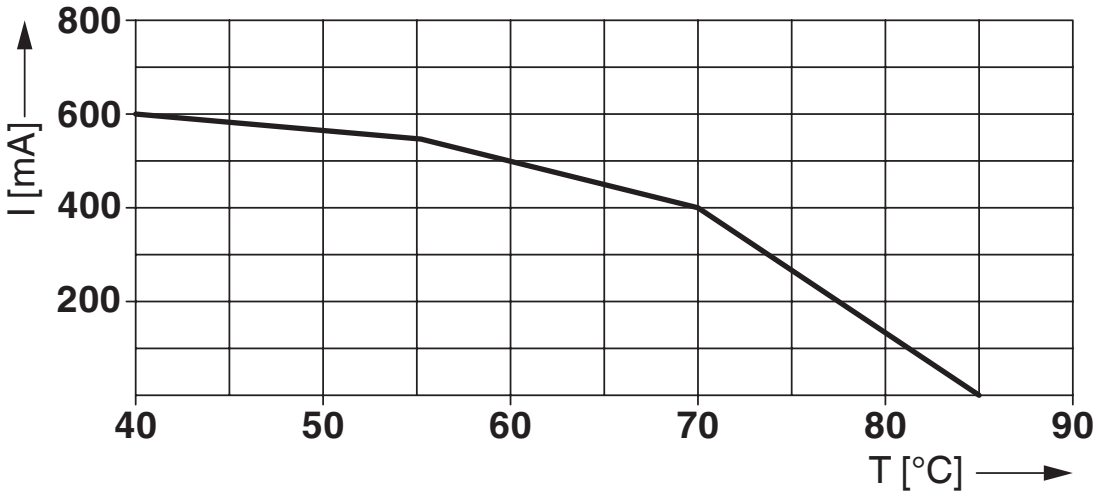

Circuit diagram

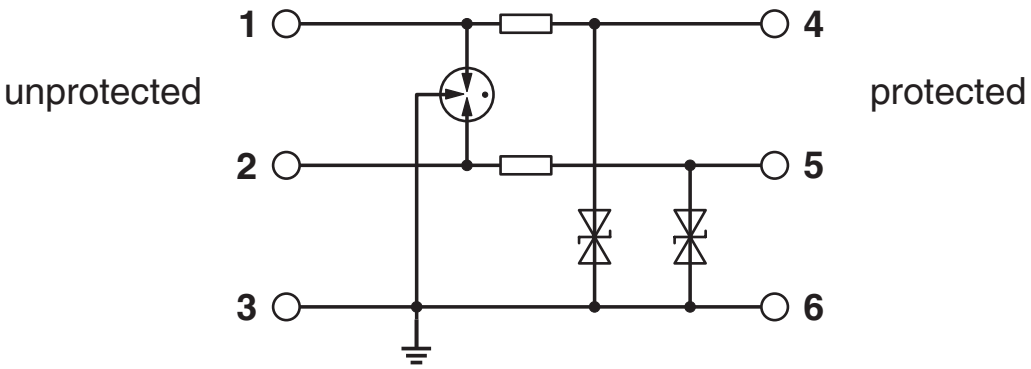

Approvals

To download certificates, visit the product detail page: https://www.phoenixcontact.com/us/products/2906799

CSA
Approval ID: 70136717

DNV GL
Approval ID: TAE000027G

UL Listed
Approval ID: FILE E 138168

CSAus
Approval ID: 70136717

UAE-RoHS
Approval ID: 22-06-16191

Functional Safety
Approval ID: 16-06-072 R023 V3R1

cUL Listed
Approval ID: FILE E 333250

cULus Listed
Approval ID: File E 333250

Classifications

ECLASS

ECLASS-13.0	27171501
ECLASS-15.0	27171501

ETIM

ETIM 10.0	EC001466

UNSPSC

UNSPSC 21.0	39121600

Environmental product compliance

EU RoHS

Fulfills EU RoHS substance requirements	Yes
Exemption	7(a), 7(c)-I

China RoHS

Environment friendly use period (EFUP)	EFUP-50
	An article-related China RoHS declaration table can be found in the download area for the respective article under "Manufacturer declaration". For all articles with EFUP-E, no China RoHS declaration table issued and required.

EU REACH SVHC

REACH candidate substance (CAS No.)	Lead(CAS: 7439-92-1)
SCIP	575f446e-ca3e-42f4-aa25-16b370c81407

EF3.1 Climate Change

CO2e kg	1.107 kg CO2e

Phoenix Contact 2026 © - all rights reserved
https://www.phoenixcontact.com

Phoenix Contact USA
586 Fulling Mill Road
Middletown, PA 17057, United States
(+717) 944-1300
info@phoenixcon.com