UM 72-PROFIL CM - Profile

2906225

https://www.phoenixcontact.com/us/products/2906225

Please be informed that the data shown in this PDF document is generated from our online catalog. Please find the complete data in the user documentation. Our general terms of use for downloads are valid.

Drawn section panel mounting base, with a constructional width of 72 mm and a fixed length of 200 cm



The figure shows the variant UM 45-Profil CM

Commercial data

Item number	2906225
Packing unit	1 pc
Minimum order quantity	1 pc
Sales key	AC13
Product key	ACHDBA
GTIN	4017918277437
Weight per piece (including packing)	890.63 g
Weight per piece (excluding packing)	890.63 g
Customs tariff number	39162000
Country of origin	DE

Technical data

Product properties

Product type	Component housing lower part
Housing type	Press-drawn section housings
Housing type	Extruded profile housings
Housing series	UM
Product family	UM72
Ventilation openings present	no

Dimensions

Dimensional drawing	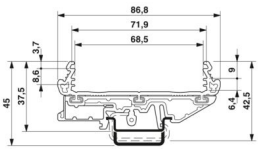
Depth	21.5 mm
Length	2 m

External dimensions

Profile width (external)	86.8 mm

Internal dimensions

Profile width (internal)	71.9 mm

Material specifications

Color (Profile)	green (RAL 6021)
Material Profile	PVC

Environmental and real-life conditions

Ambient conditions

Ambient temperature (operation)	-15 °C ... 50 °C

PCB data

Number of PCB holders	2

Mounting

Mounting type	Latching with side elements, latching with foot element

Drawings

Dimensional drawing

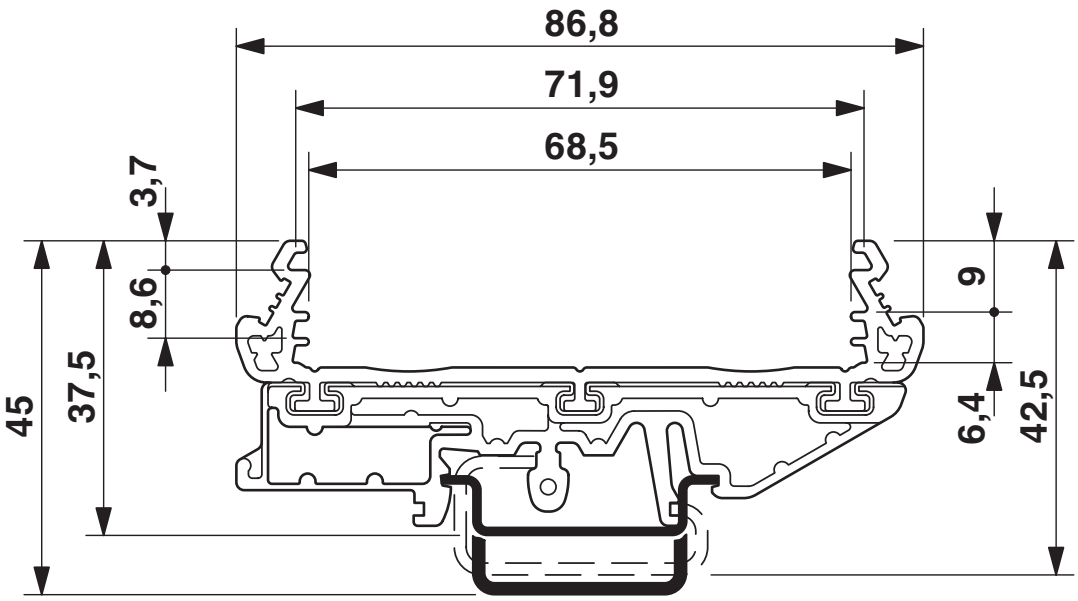

Classifications

ECLASS

ECLASS-13.0	27190601
ECLASS-15.0	27190601

ETIM

ETIM 10.0	EC002779

UNSPSC

UNSPSC 21.0	31261500

Environmental product compliance

China RoHS

Environment friendly use period (EFUP)	EFUP-E
	No hazardous substances above the limits

EU REACH SVHC

REACH candidate substance (CAS No.)	No substance above 0.1 wt%

Phoenix Contact 2026 © - all rights reserved
https://www.phoenixcontact.com

Phoenix Contact USA
586 Fulling Mill Road
Middletown, PA 17057, United States
(+717) 944-1300
info@phoenixcon.com