# MINI MCR-2-RPSS-I-2I - Repeater power supply

2905628

https://www.phoenixcontact.com/us/products/2905628

Please be informed that the data shown in this PDF document is generated from our online catalog. Please find the complete data in the user documentation. Our general terms of use for downloads are valid.

CRA-READY



4-way power supply doubler with plug-in connection technology. HART-transparent, 0(4) mA ... 20 mA input signal, 0(4) mA ... 20 mA output signals. The device can be used in both signal and power supply doubler modes. Screw connection technology.

## Product description

The power supply duplicator with plug-in connection technology supplies the transmitter in the field and electrically isolates the input signal transmitted to two loads. HART data protocols can be transmitted bi-directionally via both outputs. You can use the device in signal and power supply duplicator mode with a transmitter supply voltage of >19.5 V. On the output side, the module can be connected to passive input cards. For a maximum load of ≤500 Ω per channel, electrically isolated analog standard signals 0  mA ... 20 mA or 4  mA ... 20 mA are available. The measuring transducer supports fault monitoring and NFC communication.

## Commercial data

| | |
|---|---|
| Item number | 2905628 |
| Packing unit | 1 pc |
| Minimum order quantity | 1 pc |
| Sales key | C404 |
| Product key | DK1121 |
| GTIN | 4046356999571 |
| Weight per piece (including packing) | 71.7 g |
| Weight per piece (excluding packing) | 119.4 g |
| Customs tariff number | 85437090 |
| Country of origin | DE |

# Technical data

## Notes

Note on application

| | |
|---|---|
| Note on application | As things stand now, we are preparing the product so that, as of December 11, 2027, it will comply with the requirements of the EU Cyber Resilience Act (CRA) based on the information currently available regarding the CRA. |

Utilization restriction

| | |
|---|---|
| EMC note | EMC: class A product, see manufacturer's declaration in the download area |

## Product properties

| | |
|---|---|
| Product type | Repeater power supply |
| Product family | MINI Analog Pro |
| No. of channels | 2 |
| Configuration | DIP switches |

## Electrical properties

| | |
|---|---|
| Electrical isolation | 4-way isolation |
| Electrical isolation between input and output | yes |
| Limit frequency (3 dB) | > 1 kHz |
| Signal transmission behavior | In = Out |
| Step response (10-90%) | < 400 µs |
| Maximum temperature coefficient | 0.0075 %/K |
| Maximum transmission error | ≤ 0.05 % (of final value 20 mA) |

Electrical isolation

| | |
|---|---|
| Overvoltage category | II |
| Pollution degree | 2 |

Electrical isolation Input/output/power supply IEC/EN 61010-1

| | |
|---|---|
| Standards/regulations | IEC/EN 61010-1 |
| Rated insulation voltage | 300 $V_{rms}$ |
| Test voltage | 3 kV AC (50 Hz, 60 s) |
| Insulation | Reinforced insulation |

Supply

| | |
|---|---|
| Nominal supply voltage | 24 V DC |
| Supply voltage range | 9.6 V DC ... 30 V DC (The DIN rail connector (ME 6,2 TBUS-2 1,5/5-ST-3,81 GN, item no. 2869728) can be used to bridge the supply voltage. It can be snapped onto a 35 mm DIN rail in accordance with EN 60715) |
| Typical current consumption | 40 mA (For 24 V DC and in signal duplicator mode) |
| | 65 mA (For 24 V DC and in power supply duplicator mode) |
| | 75 mA (For 12 V DC and in signal duplicator mode) |

| | |
|---|---|
| | 130 mA (For 12 V DC and in power supply duplicator mode) |
| Power consumption | 1.6 W (at $I_{OUT}$ = 20 mA, 500 Ω load) |

## Input data

Signal: Current

| | |
|---|---|
| Description of the input | Sensor circuit |
| Number of inputs | 1 |
| Current input signal | 0 mA ... 20 mA (Signal duplicator mode) |
| | 4 mA ... 20 mA (Power supply and signal duplicator mode) |
| Input resistance current input | 90 Ω (+1.6 V) |
| Transmitter supply voltage | > 19.5 V |

## Output data

Signal: Current

| | |
|---|---|
| Number of outputs | 2 |
| Open-circuit voltage | < 20 V |
| Current output signal | 0 mA ... 20 mA (Signal duplicator mode) |
| | 4 mA ... 20 mA (Power supply and signal duplicator mode) |
| Max. current output signal | 25 mA |
| Load/output load current output | ≤ 500 Ω (per channel) |
| Ripple | < 20 $mV_{PP}$ (500 Ω) |

## Connection data

| | |
|---|---|
| Connection method | Screw connection |
| Stripping length | 10 mm |
| Screw thread | M3 |
| Conductor cross-section rigid | 0.2 mm² ... 1.5 mm² (with ferrule) |
| | 0.14 mm² ... 2.5 mm² (without ferrule) |
| Conductor cross-section flexible | 0.14 mm² ... 2.5 mm² |
| Conductor cross-section AWG | 24 ... 12 (flexible) |
| Tightening torque | 0.5 Nm ... 0.6 Nm |

## Ex data

| | |
|---|---|
| Ex installation (EPL) | Gc |
| | Div. 2 |

## Interfaces

Data communication (bypass)

| | |
|---|---|
| HART function | HART transparency |
| Protocols supported | HART |
| Limit frequency (3 dB) | ≈ ⎍ kHz |

## Signaling

| | |
|---|---|
| Status display | Green LED (supply voltage) |

## Dimensions

| | |
|---|---|
| Width | 6.2 mm |
| Height | 109.81 mm |
| Depth | 119.2 mm |

## Material specifications

| | |
|---|---|
| Color | gray (RAL 7042) |
| Housing material | PBT |
| Fire protection for rail vehicles (DIN EN 45545-2) R22 | HL 1 - HL 2 |
| Fire protection for rail vehicles (DIN EN 45545-2) R23 | HL 1 - HL 2 |
| Fire protection for rail vehicles (DIN EN 45545-2) R24 | HL 1 - HL 2 |

## Environmental and real-life conditions

### Ambient conditions

| | |
|---|---|
| Degree of protection | IP20 (not assessed by UL) |
| Ambient temperature (operation) | -40 °C ... 70 °C |
| Ambient temperature (storage/transport) | -40 °C ... 85 °C |
| Altitude | ≤ 2000 m |
| Permissible humidity (operation) | 5 % ... 95 % (non-condensing) |

## Approvals

### CE

| | |
|---|---|
| Certificate | CE-compliant |

### ATEX

| | |
|---|---|
| Identification | Ⓔx II 3 G Ex ec ic IIC T4 Gc |
| Certificate | BVS 19 ATEX E 047 X |

### IECEx

| | |
|---|---|
| Identification | Ex ec ic IIC T4 Gc |
| Certificate | IECEx BVS 19.0041X |

### CCC / China-Ex

| | |
|---|---|
| Identification | Ex ec ic IIC T4 Gc |
| Certificate | 2022122303115963 |

### UL, USA/Canada

| | |
|---|---|
| Identification | UL 508 Listed |
| | Class I, Div. 2, Groups A, B, C, D T5 |
| | Class I, Zone 2, Group IIC T5 |

### Shipbuilding approval

| | |
|---|---|
| Certificate | DNV GL TAA000021E Rev. 1 |

EAC Ex

| | |
|---|---|
| Identification | Ex ec ic IIC T4 Gc |
| Certificate | BY/112 02.01 TP012 103.01 00081 |

Shipbuilding data

| | |
|---|---|
| Temperature | B |
| Humidity | B |
| Vibration | A |
| EMC | A |
| Enclosure | Required protection according to the Rules shall be provided upon installation on board |

## EMC data

| | |
|---|---|
| Electromagnetic compatibility | Conformance with EMC directive |
| Noise immunity | EN 61000-6-2 |
| Note | When being exposed to interference, there may be minimal deviations. |

Noise emission

| | |
|---|---|
| Standards/regulations | EN 61000-6-4 |

Electrostatic discharge

| | |
|---|---|
| Standards/regulations | EN 61000-4-2 |

Electrostatic discharge

| | |
|---|---|
| Comments | Safety measures must be taken to prevent electrostatic discharge. |

Electromagnetic HF field

| | |
|---|---|
| Designation | Electromagnetic RF field |
| Standards/regulations | EN 61000-4-3 |

Fast transients (burst)

| | |
|---|---|
| Designation | Fast transients (burst) |
| Standards/regulations | EN 61000-4-4 |

Surge current load (surge)

| | |
|---|---|
| Standards/regulations | EN 61000-4-5 |

Conducted interference

| | |
|---|---|
| Designation | Conducted interferences |
| Standards/regulations | EN 61000-4-6 |

## Standards and regulations

| | |
|---|---|
| Electrical isolation | 4-way isolation |

GB Standard

| | |
|---|---|
| Standards/regulations | GB/T 3836.1 |
| | GB/T 3836.3 |

| | |
|---|---|
| | GB/T 3836.4 |

## Mounting

| | |
|---|---|
| Mounting type | DIN rail mounting |
| Assembly note | The DIN rail connector can be used for bridging the supply voltage. It can be snapped onto a 35 mm EN 60715 DIN rail. |
| Mounting position | any |

## Drawings

Block diagram

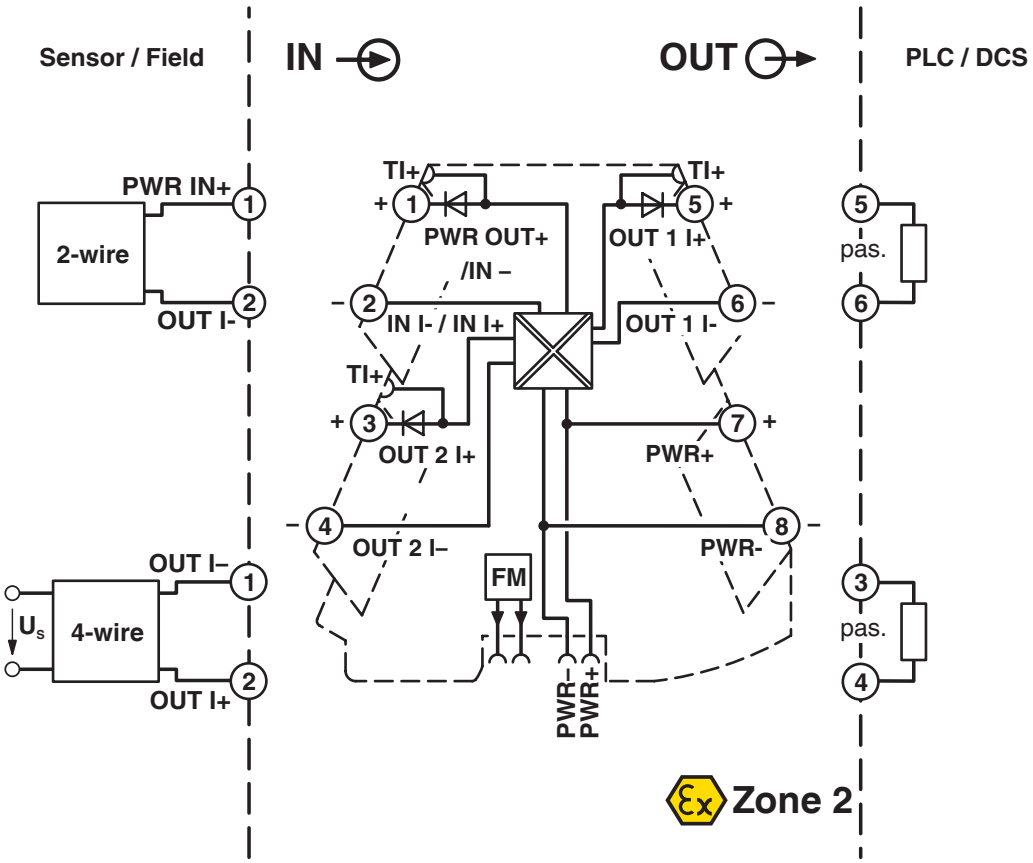

## Approvals

To download certificates, visit the product detail page: https://www.phoenixcontact.com/us/products/2905628

**UL Listed**
Approval ID: E238705

**cUL Listed**
Approval ID: E238705

**DNV**
Approval ID: TAA000021E

**IECEx**
Approval ID: IECEx BVS 19.0041X

**cUL Listed**
Approval ID: FILE E 196811

**UL Listed**
Approval ID: E196811

**ATEX**
Approval ID: BVS 19 ATEX E 047 X

**CCC**
Approval ID: 2022122303115963

## Classifications

### ECLASS

| | |
|---|---|
| ECLASS-13.0 | 27210120 |
| ECLASS-15.0 | 27210120 |

### ETIM

| | |
|---|---|
| ETIM 10.0 | EC002653 |

### UNSPSC

| | |
|---|---|
| UNSPSC 21.0 | 39121000 |

## Environmental product compliance

EU RoHS

| | |
|---|---|
| Fulfills EU RoHS substance requirements | Yes |
| Exemption | 7(a), 7(c)-I |

China RoHS

| | |
|---|---|
| Environment friendly use period (EFUP) | EFUP-50 |
| | An article-related China RoHS declaration table can be found in the download area for the respective article under "Manufacturer declaration". For all articles with EFUP-E, no China RoHS declaration table issued and required. |

EU REACH SVHC

| | |
|---|---|
| REACH candidate substance (CAS No.) | Lead(CAS: 7439-92-1) |
| SCIP | eab46fd0-6b5a-45c0-b31f-dcc5d9d86a88 |

Phoenix Contact 2026 © - all rights reserved
https://www.phoenixcontact.com

Phoenix Contact USA
586 Fulling Mill Road
Middletown, PA 17057, United States
(+717) 944-1300
info@phoenixcon.com