ELR H5-I-SC-24DC/500AC-2-L - Hybrid motor starter

2905513

https://www.phoenixcontact.com/us/products/2905513

Please be informed that the data shown in this PDF document is generated from our online catalog. Please find the complete data in the user documentation. Our general terms of use for downloads are valid.



Hybrid motor starter, for reversing 3~ AC motors up to 550 V AC/2.4 A, 24 V DC input, class 10 tripping characteristic, overload function, without symmetry monitoring, and without phase failure and underload detection. 1-phase motors can be switched.

Commercial data

Item number	2905513
Packing unit	1 pc
Minimum order quantity	1 pc
Sales key	C470
Product key	DK7422
GTIN	4046356964715
Weight per piece (including packing)	250.48 g
Weight per piece (excluding packing)	227.4 g
Customs tariff number	85371098
Country of origin	DE

Technical data

Product properties

Product type	Hybrid motor starters
Product family	CONTACTRON
Operating mode	100% operating factor

Electrical properties

Number of phases	3
Motor starter type	Reversing starter
Switching frequency	≤ 2 Hz (Load-dependent)
Maximum power dissipation for nominal condition	2.2 W
Switching frequency	≤ 2 Hz (Load-dependent)
Maximum power dissipation	3.3 W
Minimum power dissipation	1.1 W
Coordination type	1

Supply

Rated control circuit supply voltage U_S	24 V DC
Control supply voltage range	19.2 V DC ... 30 V DC
Rated control supply current I_S	40 mA
Protective circuit	Surge protection
	Reverse polarity protection

Insulation characteristics

Rated insulation voltage	500 V
Rated surge voltage	6 kV
Overvoltage category	III
Degree of pollution	2
Insulation characteristics between the control input and control supply voltage, and auxiliary circuit to the main circuit	Safe isolation (IEC 60947-1) at operating voltage ≤ 300 V AC
	Basic insulation (IEC 60947-1) at operating voltage 300 V AC ... 500 V AC
Isolation characteristics between the control input and control supply voltage to auxiliary circuit	Safe isolation (IEC 60947-1) in the auxiliary circuit ≤ 300 V AC

Input data

Control

Input name	Control input right/left
Rated actuating voltage U_C	24 V DC
Triggering voltage range	19.2 V DC ... 30 V DC
Rated actuating current I_C	5 mA (Input type 1)
Switching threshold	9.6 V (“0” signal)
	19.2 V (“1” signal)
Typical turn-off time	< 30 ms

Protective circuit	Reverse polarity protection

Output data

AC output

Rated operating voltage U_e	500 V AC
Operating voltage range	42 V AC ... 550 V AC
Rated operating current I_e	2.4 A (AC-51)
	2.4 A (AC-53a)
Mains frequency	50/60 Hz
Load current range	180 mA ... 2.4 A (see to derating)
Trigger characteristic in acc. with IEC 60947-4-2	Class 10
Cooling time	20 min (for auto reset)
Leakage current	0 mA
Protective circuit	Surge protection

Acknowledge output

Note	Confirmation: floating change-over contact, signal contact
Switching capacity in accordance with IEC 60947-5-1	3 A (230 V, AC15)
	2 A (24 V (DC13))

Connection data

Control circuits

Connection method	Screw connection
Stripping length	8 mm
Screw thread	M3
Conductor cross-section rigid	0.2 mm² ... 2.5 mm²
Conductor cross-section flexible	0.2 mm² ... 2.5 mm²
Conductor cross-section AWG	24 ... 14
Tightening torque	0.5 Nm ... 0.6 Nm
	5 lb_f-in. ... 7 lb_f-in.

Load circuit

Connection method	Screw connection
Stripping length	8 mm
Screw thread	M3
Conductor cross-section rigid	0.2 mm² ... 2.5 mm²
Conductor cross-section flexible	0.2 mm² ... 2.5 mm²
Conductor cross-section AWG	24 ... 14
Tightening torque	0.5 Nm ... 0.6 Nm
	5 lb_f-in. ... 7 lb_f-in.

Signaling

Status display	LED (yellow)
Operating voltage display	Green LED

Error indication	Red LED

Dimensions

Width	22.5 mm
Height	107 mm
Depth	114 mm

Material specifications

Flammability rating according to UL 94 (Housing)	V0 (Housing)

Environmental and real-life conditions

Ambient conditions

Degree of protection	IP20
Ambient temperature (operation)	-25 °C ... 70 °C (observe derating)
Ambient temperature (storage/transport)	-40 °C ... 80 °C
Altitude	≤ 2000 m

Approvals

UL approval

Certificate	NLDX.E228652

UL data

SCCR	100 kA (500 V AC (fuse: 30 A class CC/30 A class J (high fault)))
	5 kA (500 V AC (fuse: 20 A RK5 (standard fault)))
FLA	2.4 A (500 V AC)
Group installation	20 A (class RK5, SCCR 5kA, #24 - 14 AWG max. solid and stranded)
	30 A (class CC or J, SCCR 100kA, #24 - 14 AWG max, solid and stranded)
Category code	NLDX / NRNT

Standards and regulations

Standards/regulations

Standards/regulations	IEC 60947-1
	IEC 60947-4-2
	IEC 61508
	ISO 13849

Mounting

Mounting type	DIN rail mounting
Assembly note	alignable, for spacing see derating
Mounting position	vertical (horizontal DIN rail, motor output below)

Drawings

Circuit diagram

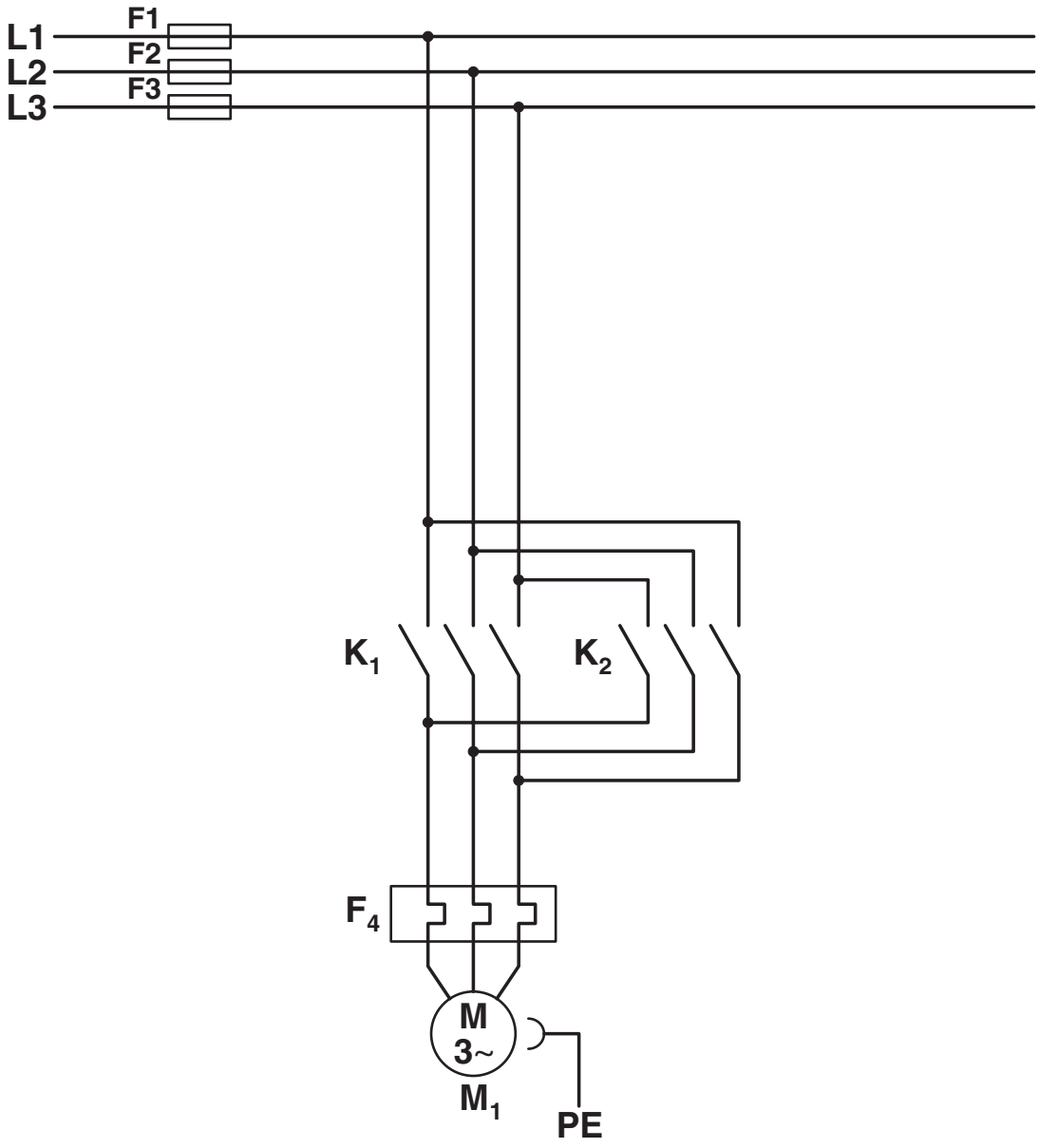

Conventional structure

Main current path contactor
K1 = Left contactor
K2 = Right contactor
F4 = Motor protection relay

Circuit diagram

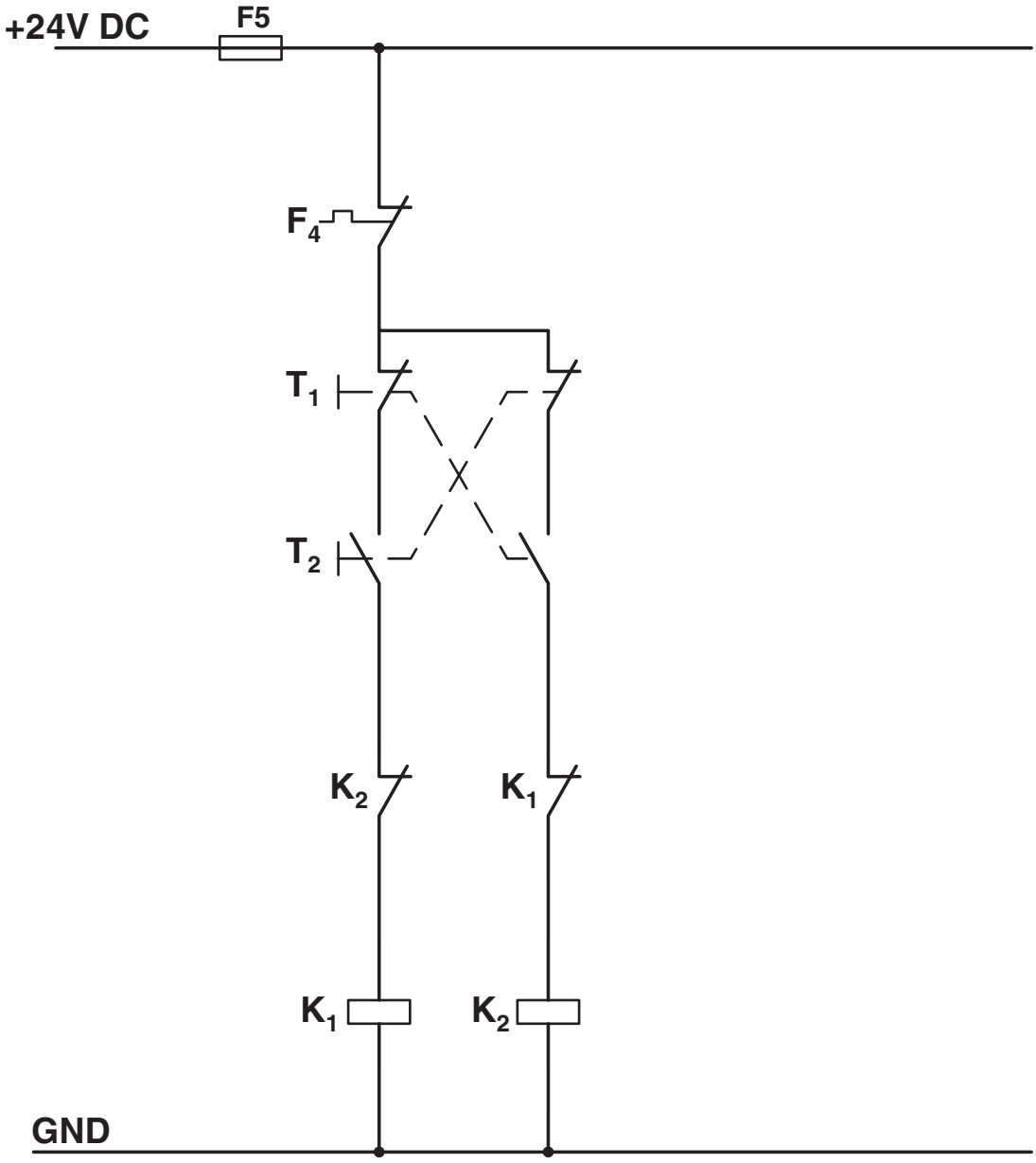

Conventional structure

Control current path contactor
K1 = Left contactor
K2 = Right contactor
T1 = Left, T2 = Right
F4 = Motor protection relay

Circuit diagram

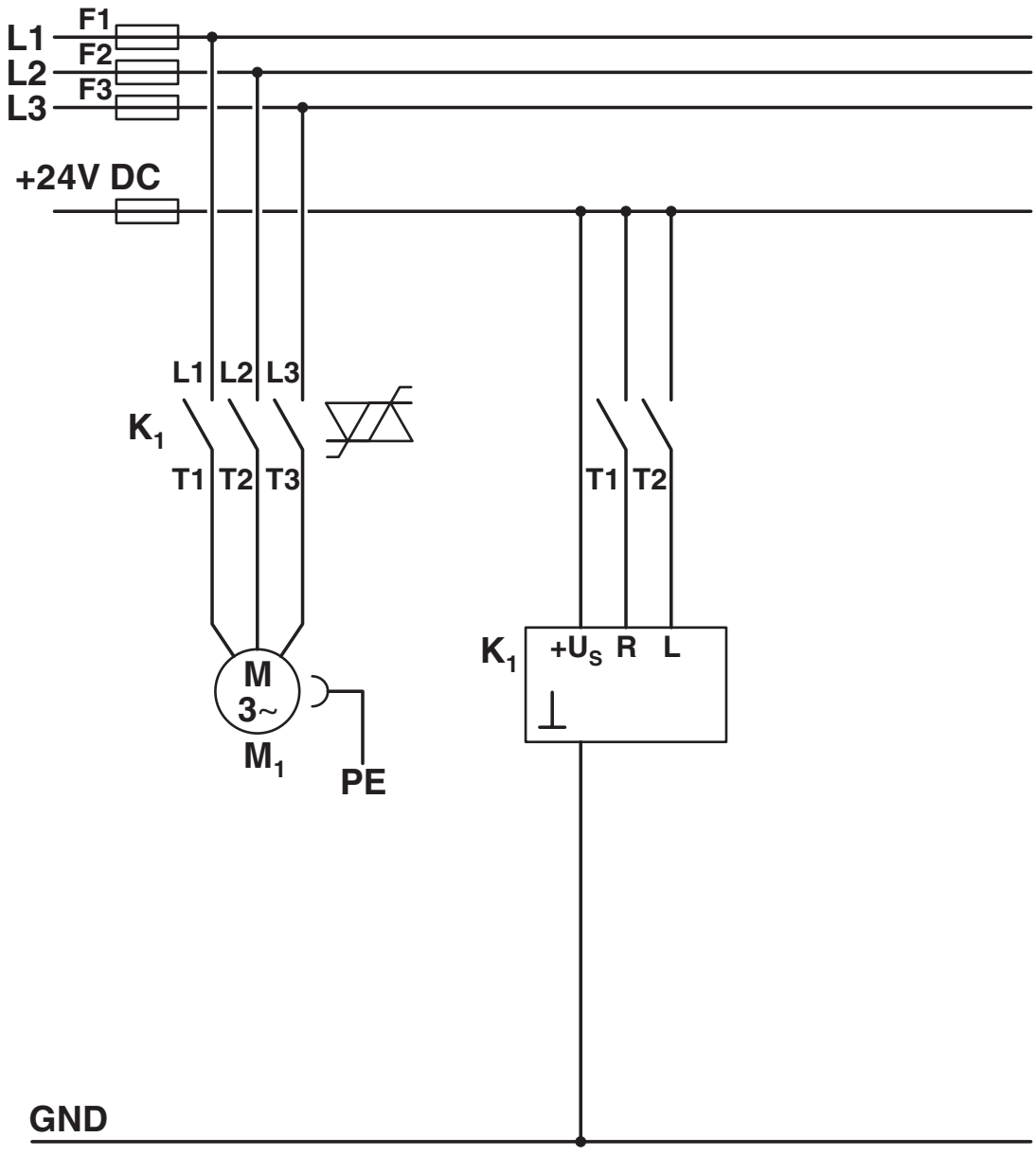

Structure with CONTACTRON

Main and control current path for '3 in 1' hybrid motor starter
K1 = '3 in 1' hybrid motor starter
T1 = Right, T2 = Left

Circuit diagram

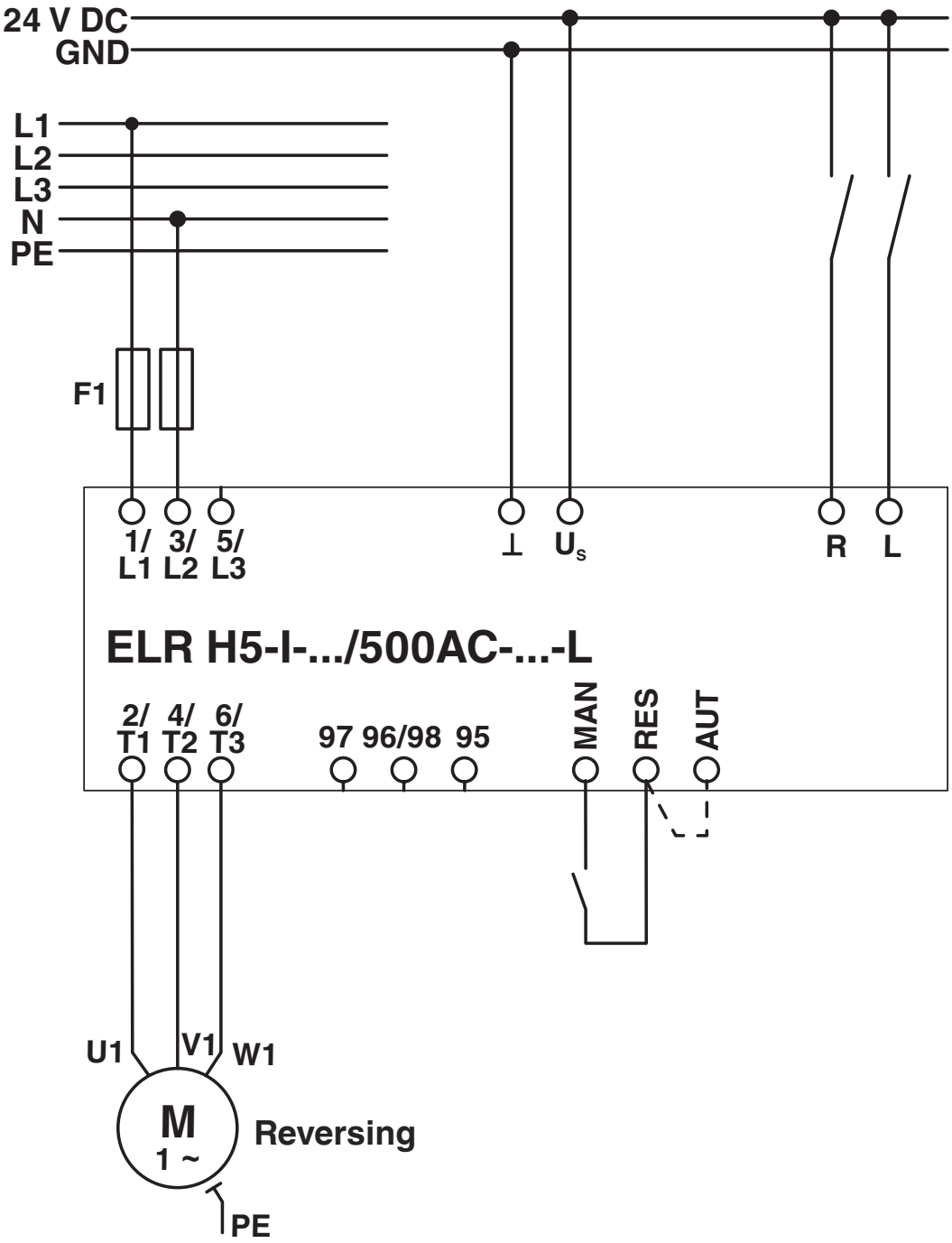

Example circuit for reversing 1-phase motors

Block diagram

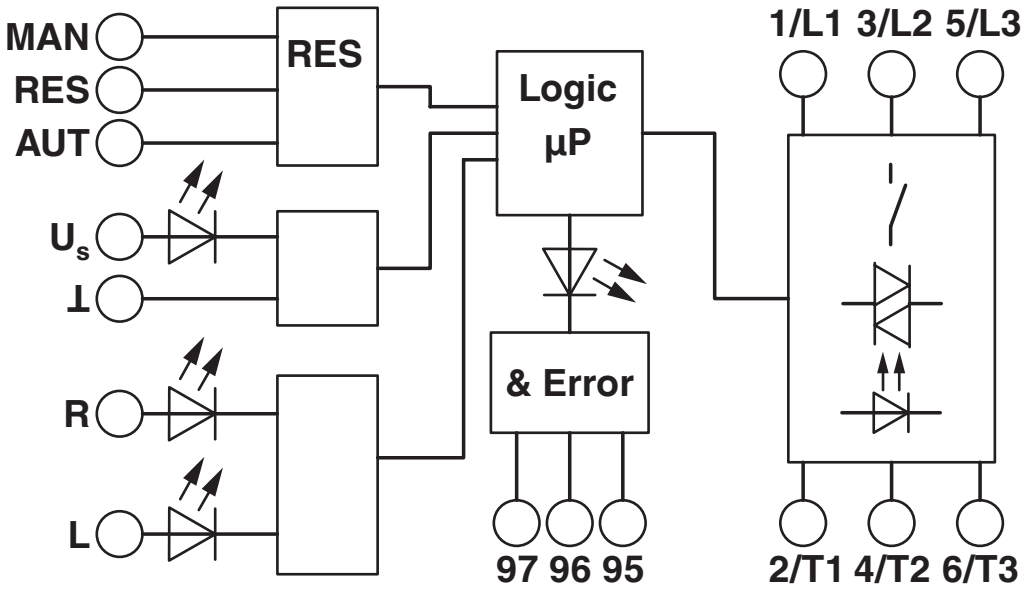

Approvals

To download certificates, visit the product detail page: https://www.phoenixcontact.com/us/products/2905513

UL Listed
Approval ID: FILE E 323771

CCC
Approval ID: 2016010304871315

cUL Listed
Approval ID: FILE E 323771

cUL Listed
Approval ID: E228652

UL Listed
Approval ID: E228652

Classifications

ECLASS

ECLASS-13.0	27370905
ECLASS-15.0	27370905

ETIM

ETIM 10.0	EC001037

UNSPSC

UNSPSC 21.0	25173900

Environmental product compliance

EU RoHS

Fulfills EU RoHS substance requirements	Yes
Exemption	7(a), 7(a)-I, 7(c)-I

China RoHS

Environment friendly use period (EFUP)	EFUP-50
	An article-related China RoHS declaration table can be found in the download area for the respective article under "Manufacturer declaration". For all articles with EFUP-E, no China RoHS declaration table issued and required.

EU REACH SVHC

REACH candidate substance (CAS No.)	1-Methyl-2-pyrrolidone (NMP)(CAS: 872-50-4)
	Lead(CAS: 7439-92-1)
SCIP	4d786258-c05b-4dd9-8d98-47ea32173921

Phoenix Contact 2026 © - all rights reserved
https://www.phoenixcontact.com

Phoenix Contact USA
586 Fulling Mill Road
Middletown, PA 17057, United States
(+717) 944-1300
info@phoenixcon.com