MACX MCR-SL-2I-2I-ILP - Input isolator

2905280

https://www.phoenixcontact.com/us/products/2905280

Please be informed that the data shown in this PDF document is generated from our online catalog. Please find the complete data in the user documentation. Our general terms of use for downloads are valid.



Input loop-powered input isolator with increased isolating voltage for electrical isolation of 0 mA/4 mA ... 20 mA signals. Input signal = output signal. number of channels: 2, Standard configuration, Loop-powered, 2-way isolation, Safety Integrity Level (SIL, IEC 61508): 3, Screw connection

Product description

Two-channel input-loop-powered 2-way isolator with plug-in connection technology for the electrical isolation and filtering of analog signals. The input-loop-powered isolator allows operation with active sensor technology with a supply voltage of 6 V DC to 30 V DC. The device is powered via the current loop of the sensor. Input signal = output signal: 0(4) mA to 20 mA. With screw connection.

Commercial data

Item number	2905280
Packing unit	1 pc
Minimum order quantity	1 pc
Sales key	C402
Product key	DK1111
GTIN	4046356944373
Weight per piece (including packing)	166.6 g
Weight per piece (excluding packing)	150 g
Customs tariff number	85437090
Country of origin	DE

Technical data

Product properties

Product type	Signal conditioner
Product family	MACX Analog
No. of channels	2

Electrical properties

Electrical isolation	2-way isolation
Electrical isolation between input and output	yes
Signal transmission behavior	In = Out
Maximum temperature coefficient	≤ 0.002 %/K (of measured value / 100 Ω load)
Transmission error, typical	0.08 % (of final value)

Electrical isolation

Test voltage	5 kV AC (50 Hz, 60 s)
Overvoltage category	II
Pollution degree	2

Electrical isolation Input/output/power supply IEC/EN 61010-1

Standards/regulations	IEC/EN 61010-1
Rated insulation voltage	600 V_{rms}
Insulation	Safe isolation

Supply

Supply voltage range	loop-powered, no external supply necessary

Input data

Signal: Current

Number of inputs	2
Configurable/programmable	no
Max. voltage input signal	< 30.5 V
Current input signal	0 mA ... 20 mA
	4 mA ... 20 mA
Input voltage limitation	30.5 V
Voltage dissipation	2.9 V (I = 20 mA)
Step response (10-90%)	5 ms (500 Ω load)
Additional error, load-dependent	0.022 % (of measured value / 100 Ω load)
Response current	~ 50 µA

Output data

Signal: Current

Number of outputs	2
Configurable/programmable	no

Max. voltage output signal	27.5 V
Current output signal	0 mA ... 20 mA
	4 mA ... 20 mA
Load/output load current output	≤ 1375 Ω (I = 20 mA)
Residual ripple	< 10 mV_{rms} (500 Ω load)

Connection data

Connection method	Screw connection
Stripping length	7 mm
Screw thread	M3
Conductor cross-section rigid	0.2 mm² ... 2.5 mm²
Conductor cross-section flexible	0.2 mm² ... 2.5 mm²
Conductor cross-section AWG	24 ... 14
Tightening torque	0.5 Nm ... 0.6 Nm

Test socket

Max. diameter	2.3 mm

Ex data

Ex installation (EPL)	Gc
	Div. 2

Dimensions

Dimensional drawing	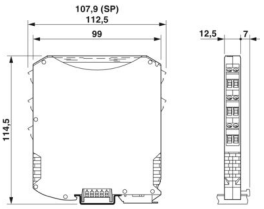
Width	12.5 mm
Height	112.5 mm
Depth	113.7 mm
Depth NS 35/7,5	114.5 mm (Snapped onto DIN rail NS 35/7,5 in accordance with EN 60715)

Material specifications

Color	gray (RAL 7042)
Flammability rating according to UL 94 (Housing)	V0 (Housing)
Housing material	PA 6.6-FR

Environmental and real-life conditions

Ambient conditions

Degree of protection	IP20 (not assessed by UL)
Ambient temperature (operation)	-40 °C ... 85 °C

Ambient temperature (storage/transport)	-40 °C ... 85 °C
Altitude	≤ 2000 m
Permissible humidity (operation)	5 % ... 95 % (non-condensing)

Approvals

CE

Certificate	CE-compliant
Note	and EN 61326-1

ATEX

Identification	Ⓔx II 3 G Ex nA IIC T4 Gc X
Certificate	PxCIF15ATEX2905278X

UL, USA/Canada

Identification	UL 61010 Listed
	Class I, Div. 2, Groups A, B, C, D T4
	Class I, Zone 2, Group IIC T4

Safety Integrity Level (SIL, IEC 61508)

Identification	3
Certificate	968/FSP 1200.02/26

EMC data

Electromagnetic compatibility	Conformance with EMC directive
Noise immunity	EN 61326-1

Noise emission

Standards/regulations	EN 61000-6-4

Standards and regulations

Electrical isolation	2-way isolation
Standards/regulations	EN/IEC 60079-0
	EN/IEC 60079-7

Mounting

Mounting type	DIN rail mounting

Drawings

Dimensional drawing

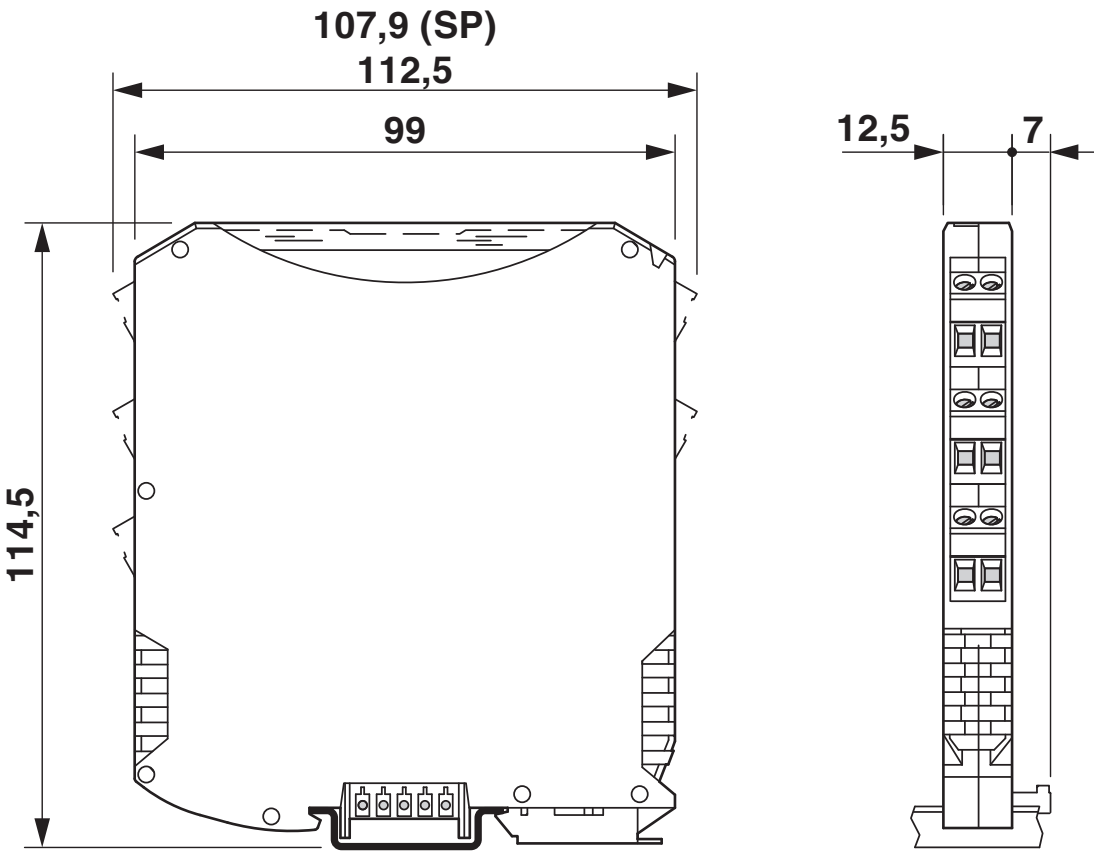

Block diagram

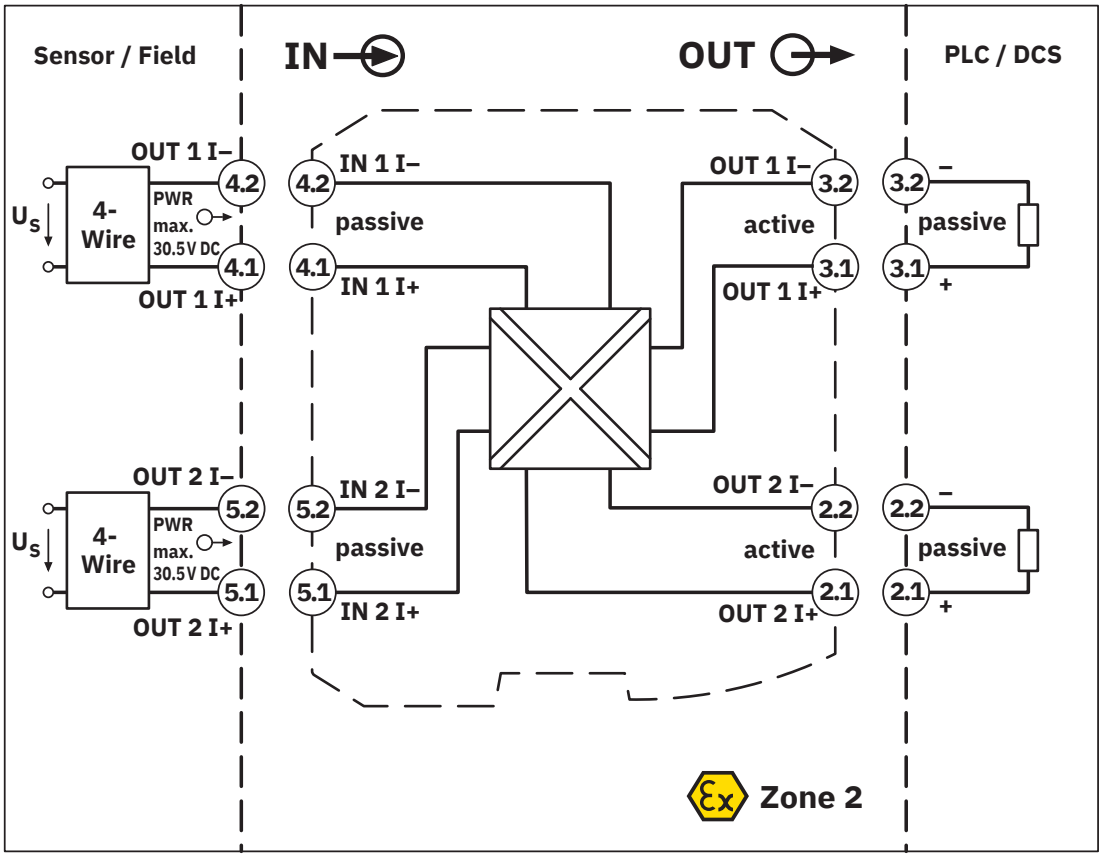

Approvals

To download certificates, visit the product detail page: https://www.phoenixcontact.com/us/products/2905280

UL Listed
Approval ID: E330267

cUL Listed
Approval ID: E330267

cUL Recognized
Approval ID: FILE E 199827

UL Recognized
Approval ID: FILE E 199827

Classifications

ECLASS

ECLASS-13.0	27210120
ECLASS-15.0	27210120

ETIM

ETIM 10.0	EC002653

UNSPSC

UNSPSC 21.0	39121000

Environmental product compliance

EU RoHS

Fulfills EU RoHS substance requirements	Yes
Exemption	7(a), 7(c)-I

China RoHS

Environment friendly use period (EFUP)	EFUP-50
	An article-related China RoHS declaration table can be found in the download area for the respective article under "Manufacturer declaration". For all articles with EFUP-E, no China RoHS declaration table issued and required.

EU REACH SVHC

REACH candidate substance (CAS No.)	Lead(CAS: 7439-92-1)
SCIP	87fa177a-4a51-4c61-bead-12271e204853

EF3.1 Climate Change

CO2e kg	15.29 kg CO2e

Phoenix Contact 2026 © - all rights reserved
https://www.phoenixcontact.com

Phoenix Contact USA
586 Fulling Mill Road
Middletown, PA 17057, United States
(+717) 944-1300
info@phoenixcon.com