PLT-SEC-T3-3S-230-FM - Type 3 surge protection device

2905230

https://www.phoenixcontact.com/us/products/2905230

Please be informed that the data shown in this PDF document is generated from our online catalog. Please find the complete data in the user documentation. Our general terms of use for downloads are valid.

Plug-in device protection, according to type 3/class III, for 3-phase power supply networks with separate N and PE (5-conductor system: L1, L2, L3, N, PE), with integrated surge-proof fuse and remote indication contact.

Your advantages

- Surge protection family for universal use with optimum energy coordination from the lightning current arrester to the device protection
- Easy to maintain due to consistently pluggable protection modules
- Excellent level of information provided by visual status indicator and remote indication contact
- Optimal additional protection of the industrial power supply for a longer service life and increased availability of the system

ELEKTROGERÄTE RÜCKNAHME

Commercial data

Item number	2905230
Packing unit	1 pc
Minimum order quantity	1 pc
Sales key	CL19
Product key	CL14A1
GTIN	4046356939706
Weight per piece (including packing)	156.3 g
Weight per piece (excluding packing)	156.3 g
Customs tariff number	85363090
Country of origin	DE

PLT-SEC-T3-3S-230-FM - Type 3 surge protection device

2905230

https://www.phoenixcontact.com/us/products/2905230

Technical data

Product properties

Product type	Device protection
Product family	SEC Family
IEC power supply system	TN-S
	TT
Type	DIN rail module, two-section, divisible
Number of positions	4
Surge protection fault message	Optical, remote indicator contact

Insulation characteristics

Overvoltage category	III
Pollution degree	2
IEC test classification	III
	T3
EN type	T3
Number of ports	One

Electrical properties

Indicator/remote signaling

Connection name	Remote fault indicator contact
Switching function	N/C contact
Operating voltage	250 V AC
	125 V DC (200 mA DC)
Operating current	3 A AC
	1 A DC (30 V DC)

Connection data

Connection method	Screw connection
Screw thread	M3
Tightening torque	0.8 Nm
Conductor cross-section flexible	0.2 mm² ... 2.5 mm²
Conductor cross-section rigid	0.2 mm² ... 4 mm²
Conductor cross-section AWG	24 ... 12

Dimensions

Dimensional drawing	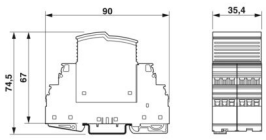
Width	35.4 mm

Height	90 mm
Depth	74.5 mm (incl. DIN rail 7.5 mm)
Horizontal pitch	2 HP

Material specifications

Color (Male connector)	light gray (RAL 7035)
Color (Base element)	gray (RAL 7042)
Flammability rating according to UL 94	V-0
CTI value of material	600
Insulating material	PA 6.6-FR 20% GF
	PA 6.6-FR
Material group	I
Housing material	PA 6.6-FR 20 % GF
	PA 6.6-FR

Protective circuit

Mode of protection	L-N
	L-PE
	N-PE
Direction of action	3L-N & N-PE
Nominal voltage U_N	230/400 V AC (TN-S)
	230/400 V AC (TT - only in use with RCD)
Nominal frequency f_N	50 Hz (60 Hz)
Maximum continuous operating voltage U_C	264 V AC
Rated load current I_L	26 A (30 °C)
Protective conductor current I_{PE}	≤ 5 µA
Standby power consumption P_C	≤ 2 VA (at U_{REF})
	≤ 2.2 VA (at U_C)
Reference test voltage U_{REF}	255 V AC
Nominal discharge current I_n (8/20) µs	3 kA
Combination wave U_{OC}	6 kV
Voltage protection level U_p (L-N)	≤ 1.4 kV
Voltage protection level U_p (L-PE)	≤ 1.5 kV
Voltage protection level U_p (N-PE)	≤ 1.5 kV
TOV behavior at U_T (L-N)	440 V AC (5 s / withstand mode)
	440 V AC (120 min / withstand mode)
TOV behavior at U_T (L-PE)	440 V AC (5 s / withstand mode)
	440 V AC (120 min / withstand mode)
	1455 V AC (200 ms / safe failure mode)
TOV behavior at U_T (N-PE)	1200 V AC (200 ms / safe failure mode)
Response time t_A (L-N)	≤ 25 ns
Response time t_A (L-PE)	≤ 100 ns
Response time t_A (N-PE)	≤ 100 ns
Short-circuit current rating I_{SCCR}	1.5 kA AC

Maximum backup fuse for through wiring	25 A (gG / B / C)
Max. backup fuse with branch wiring	not required

Environmental and real-life conditions

Ambient conditions

Degree of protection	IP20
Ambient temperature (operation)	-40 °C ... 70 °C
Ambient temperature (storage/transport)	-40 °C ... 70 °C
Altitude	≤ 2000 m (amsl)
Permissible humidity (operation)	5 % ... 95 %
Shock (operation)	30g (Half-sine / 11 ms / 3x ±X, ±Y, ±Z)
Vibration (operation)	5g (10 Hz ... 150 Hz / 20 cycles/axis / X, Y, Z)

Standards and regulations

Standards/specifications	IEC 61643-11
Note	2011

EN 61643-11

Standards/specifications	EN 61643-11
Note	2012

Mounting

Mounting type	DIN rail: 35 mm

Drawings

Dimensional drawing

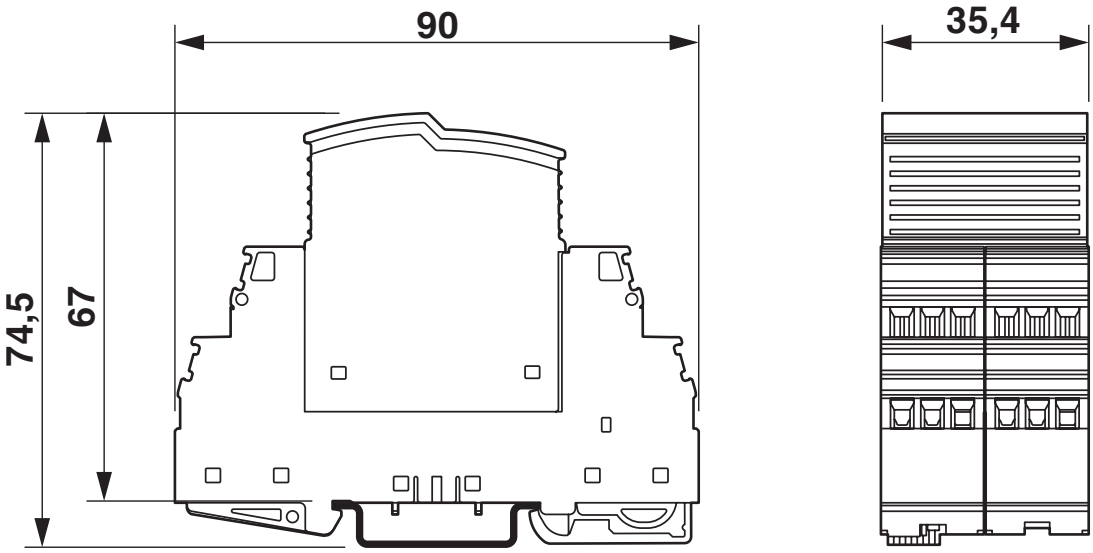

PLT-SEC-T3-3S-230-FM - Type 3 surge protection device

2905230

https://www.phoenixcontact.com/us/products/2905230

Product drawing

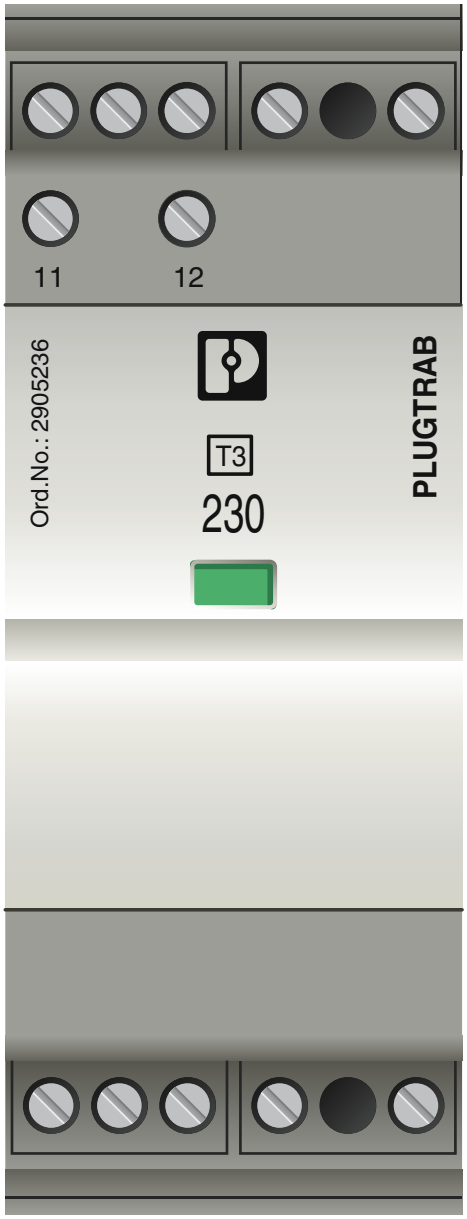

Diagram

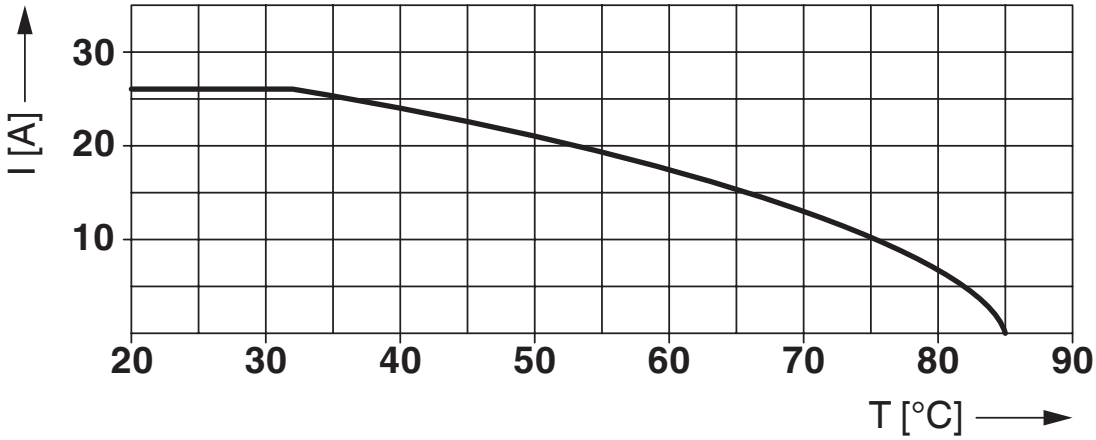

Nominal current depending on ambient temperature

Circuit diagram

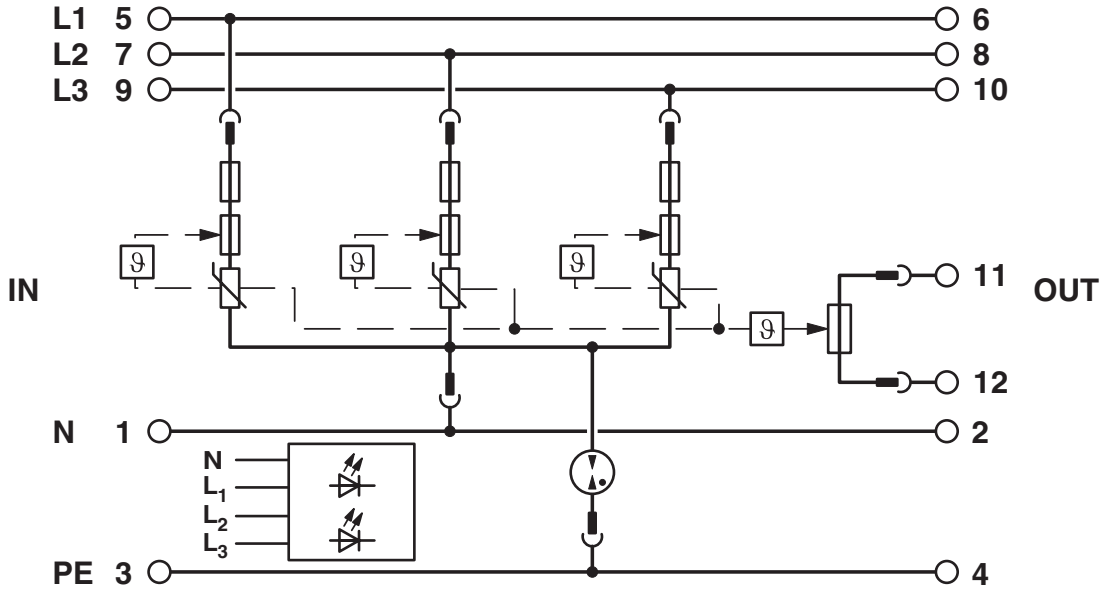

Approvals

To download certificates, visit the product detail page: https://www.phoenixcontact.com/us/products/2905230

UAE-RoHS
Approval ID: 23-10-88891

Classifications

ECLASS

ECLASS-13.0	27171203
ECLASS-15.0	27171203

ETIM

ETIM 10.0	EC000942

UNSPSC

UNSPSC 21.0	39121600

Environmental product compliance

EU RoHS

Fulfills EU RoHS substance requirements	Yes
Exemption	7(a), 7(c)-I

China RoHS

Environment friendly use period (EFUP)	EFUP-50
	An article-related China RoHS declaration table can be found in the download area for the respective article under "Manufacturer declaration". For all articles with EFUP-E, no China RoHS declaration table issued and required.

EU REACH SVHC

REACH candidate substance (CAS No.)	Lead(CAS: 7439-92-1)
	6,6'-di-tert-butyl-2,2'-methylenedi-p-cresol(CAS: 119-47-1)
SCIP	738f5b0c-f978-4c3b-9656-9dc746b512c0

Phoenix Contact 2026 © - all rights reserved
https://www.phoenixcontact.com

Phoenix Contact USA
586 Fulling Mill Road
Middletown, PA 17057, United States
(+717) 944-1300
info@phoenixcon.com