MINI MCR-2-UNI-UI-2UI - Input signal conditioner

2905026

https://www.phoenixcontact.com/us/products/2905026

Please be informed that the data shown in this PDF document is generated from our online catalog. Please find the complete data in the user documentation. Our general terms of use for downloads are valid.

CRA-READY



Universally configurable 4-way signal duplicator, with plug-in connection technology for the electrical isolation and duplication of analog signals. Configurable via DIP switch or software. Screw connection technology, standard configuration.

Product description

Configurable, freely adjustable 4-way signal duplicator with plug-in connection technology for the duplication, electrical isolation, conversion, amplification, and filtering of standard signals. Current signals between 0 mA ... 24 mA and voltage signals between 0 V ... 12 V can be processed on the input side. Signals between 0 mA ... 21 mA and 0 V ... 10.5 V are possible on the output side. Both output signals can be set independently of one another. The minimum measuring span is 1 mA and 0.5 V. Full accuracy is maintained with a measuring span greater than 10 mA and 5 V. You can configure the device using one of the free software solutions. Default settings can also be made directly on the device by simply using the DIP switches (see configuration table). The measuring transducer supports fault monitoring and NFC communication.

Commercial data

Item number	2905026
Packing unit	1 pc
Minimum order quantity	1 pc
Sales key	C404
Product key	DK1121
GTIN	4046356915243
Weight per piece (including packing)	125 g
Weight per piece (excluding packing)	120.4 g
Customs tariff number	85437090
Country of origin	DE

Technical data

Notes

Note on application

Note on application	As things stand now, we are preparing the product so that, as of December 11, 2027, it will comply with the requirements of the EU Cyber Resilience Act (CRA) based on the information currently available regarding the CRA.

Utilization restriction

EMC note	EMC: class A product, see manufacturer's declaration in the download area

Product properties

Product type	Input signal conditioner
Product family	MINI Analog Pro
No. of channels	2
Configuration	DIP switches
	Software
	App

System properties

Functionality

Configuration	DIP switches
	Software
	App

Electrical properties

Electrical isolation	4-way isolation
Electrical isolation between input and output	yes
Step response (0–99%)	140 ms (15 Hz sample rate)
	45 ms (60 Hz sample rate)
	25 ms (240 Hz sample rate, can only be set via software)
Maximum temperature coefficient	0.01 %/K
Maximum transmission error	≤ 0.05 % (of the maximum value of the configured output range)

Electrical isolation

Overvoltage category	II
Pollution degree	2

Electrical isolation Input/output/power supply IEC/EN 61010-1

Standards/regulations	IEC/EN 61010-1
Rated insulation voltage	300 V_{rms}
Test voltage	3 kV AC (50 Hz, 60 s)
Insulation	Reinforced insulation

Supply

Nominal supply voltage	24 V DC
Supply voltage range	9.6 V DC ... 30 V DC (The DIN rail connector (ME 6,2 TBUS-2 1,5/5-ST-3,81 GN, item no. 2869728) can be used to bridge the supply voltage. It can be snapped onto a 35 mm DIN rail in accordance with EN 60715)
Typical current consumption	55 mA (24 V DC)
	110 mA (12 V DC)
Power consumption (I output)	1.5 W (at I_{OUT} = 20 mA, 9.6 V DC, 600 Ω load)

Input data

Signal: Voltage/current

Number of inputs	1
Configurable/programmable	Yes
Voltage input signal	0 V ... 10 V (via DIP switch)
	2 V ... 10 V (via DIP switch)
	0 V ... 5 V (via DIP switch)
	1 V ... 5 V (via DIP switch)
	0 V ... 12 V (can be set via software)
Max. voltage input signal	12 V
Current input signal	0 mA ... 20 mA (via DIP switch)
	4 mA ... 20 mA (via DIP switch)
	0 mA ... 10 mA (via DIP switch)
	20 mA ... 0 mA (via DIP switch)
	0 mA ... 24 mA (can be set via software)
Max. current input signal	24 mA
Input resistance of voltage input	> 120 kΩ
Input resistance current input	~ 50 Ω (+0.7 V for test diode)

Output data

Signal: Voltage/current

Number of outputs	2
Voltage output signal	0 V ... 10 V (via DIP switch)
	2 V ... 10 V (via DIP switch)
	0 V ... 5 V (via DIP switch)
	1 V ... 5 V (via DIP switch)
	0 V ... 10.5 V (can be set via software)
Max. voltage output signal	~ 12.3 V
Open-circuit voltage	≤ 18.5 V
Current output signal	0 mA ... 20 mA (via DIP switch)
	4 mA ... 20 mA (via DIP switch)
	0 mA ... 10 mA (via DIP switch)
	20 mA ... 0 mA (via DIP switch)

	0 mA ... 21 mA (can be set via software)
Max. current output signal	24.6 mA
Short-circuit current	≤ 25 mA
Load/output load voltage output	≥ 10 kΩ
Load/output load current output	≤ 600 Ω (per channel)
Ripple	< 20 mV_{PP} (600 Ω)
	< 20 mV_{PP} (600 Ω)

Connection data

Connection method	Screw connection
Stripping length	10 mm
Screw thread	M3
Conductor cross-section rigid	0.2 mm² ... 1.5 mm² (with ferrule)
	0.14 mm² ... 2.5 mm² (without ferrule)
Conductor cross-section flexible	0.14 mm² ... 2.5 mm²
Conductor cross-section AWG	24 ... 12 (flexible)
Tightening torque	0.5 Nm ... 0.6 Nm

Ex data

Ex installation (EPL)	Gc
	Div. 2

Interfaces

Data: IFS interface

Connection method	Micro USB type B

Signaling

Status display	Green LED (supply voltage)
Error indication	Red LED

Dimensions

Width	6.2 mm
Height	109.81 mm
Depth	119.2 mm

Material specifications

Color	gray (RAL 7042)
Housing material	PBT
Fire protection for rail vehicles (DIN EN 45545-2) R22	HL 1 - HL 2
Fire protection for rail vehicles (DIN EN 45545-2) R23	HL 1 - HL 2
Fire protection for rail vehicles (DIN EN 45545-2) R24	HL 1 - HL 2

Environmental and real-life conditions

Ambient conditions

Degree of protection	IP20 (not assessed by UL)
Ambient temperature (operation)	-40 °C ... 70 °C
Ambient temperature (storage/transport)	-40 °C ... 85 °C
Altitude	≤ 2000 m
Permissible humidity (operation)	5 % ... 95 % (non-condensing)

Approvals

CE

Certificate	CE-compliant

ATEX

Identification	Ⓔx II 3 G Ex ec IIC T4 Gc
Certificate	BVS 19 ATEX E 083 X

IECEx

Identification	Ex ec IIC T4 Gc
Certificate	IECEx BVS 19.0072X

CCC / China-Ex

Identification	Ex ec IIC T4 Gc
Certificate	2022122310115962

UL, USA/Canada

Identification	UL 508 Listed
	Class I, Div. 2, Groups A, B, C, D T6
	Class I, Zone 2, Group IIC T6

Shipbuilding approval

Certificate	DNV GL TAA000021E Rev. 1

EAC Ex

Identification	EAC Ex Ex ec IIC T4 Gc
Certificate	BY/112 02.01 TP012 103.01 00081

Shipbuilding data

Temperature	B
Humidity	B
Vibration	A
EMC	A
Enclosure	Required protection according to the Rules shall be provided upon installation on board

EMC data

Electromagnetic compatibility	Conformance with EMC directive
Noise immunity	EN 61000-6-2
Note	When being exposed to interference, there may be minimal deviations.

Noise emission

Standards/regulations	EN 61000-6-4

Electrostatic discharge

Standards/regulations	EN 61000-4-2

Electrostatic discharge

Comments	Safety measures must be taken to prevent electrostatic discharge.

Electromagnetic HF field

Designation	Electromagnetic RF field
Standards/regulations	EN 61000-4-3
Typical deviation from the upper range value	0.2 %

Fast transients (burst)

Designation	Fast transients (burst)
Standards/regulations	EN 61000-4-4
Typical deviation from the upper range value	0.1 %

Surge current load (surge)

Standards/regulations	EN 61000-4-5

Conducted interference

Designation	Conducted interferences
Standards/regulations	EN 61000-4-6
Typical deviation from the upper range value	2.8 %

Standards and regulations

Electrical isolation	4-way isolation

GB Standard

Standards/regulations	GB/T 3836.1
	GB/T 3836.3

Mounting

Mounting type	DIN rail mounting
Assembly note	The DIN rail connector can be used for bridging the supply voltage. It can be snapped onto a 35 mm EN 60715 DIN rail.
Mounting position	any

Drawings

Block diagram

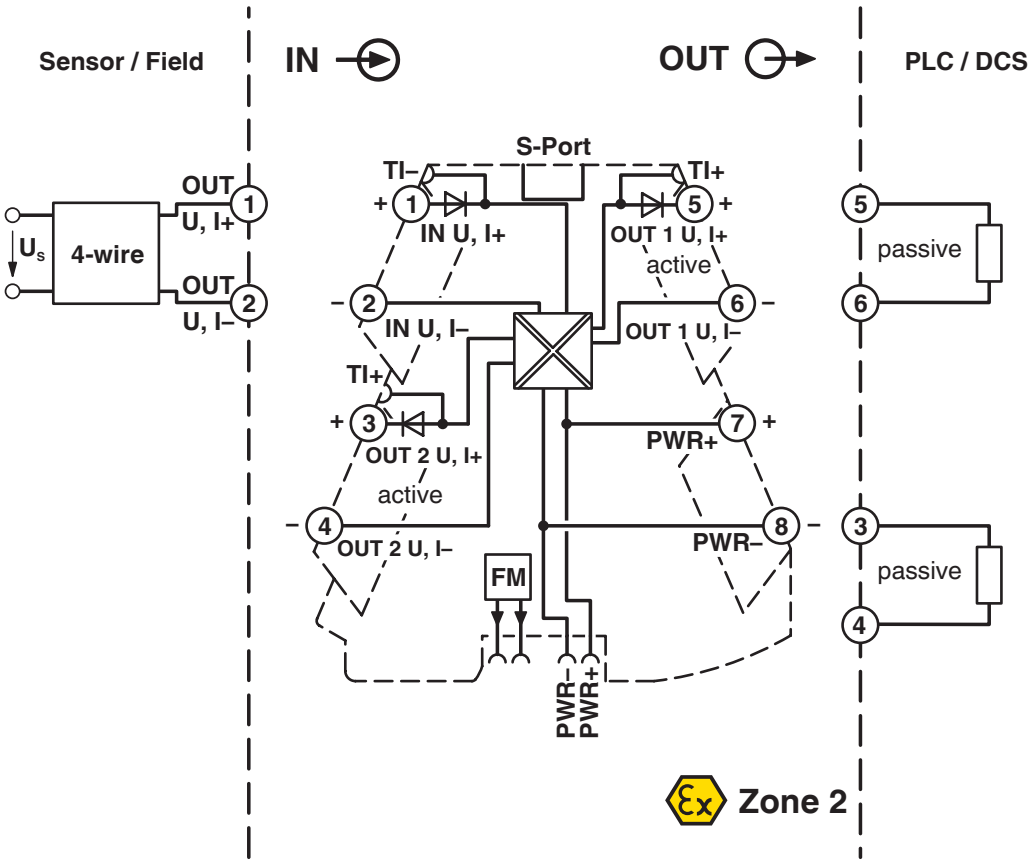

Approvals

To download certificates, visit the product detail page: https://www.phoenixcontact.com/us/products/2905026

UL Listed
Approval ID: E238705

cUL Listed
Approval ID: E238705

DNV
Approval ID: TAA000021E

IECEx
Approval ID: IECEx BVS 19.0072X

cUL Listed
Approval ID: FILE E 196811

UL Listed
Approval ID: E196811

ATEX
Approval ID: BVS 19 ATEX E 083 X

CCC
Approval ID: 2022122310115962

Classifications

ECLASS

ECLASS-13.0	27210120
ECLASS-15.0	27210120

ETIM

ETIM 10.0	EC002653

UNSPSC

UNSPSC 21.0	39121000

Environmental product compliance

EU RoHS

Fulfills EU RoHS substance requirements	Yes
Exemption	7(a), 7(c)-I

China RoHS

Environment friendly use period (EFUP)	EFUP-50
	An article-related China RoHS declaration table can be found in the download area for the respective article under "Manufacturer declaration". For all articles with EFUP-E, no China RoHS declaration table issued and required.

EU REACH SVHC

REACH candidate substance (CAS No.)	Lead(CAS: 7439-92-1)
SCIP	ee685a6e-efdb-411c-844e-52d7fb86851c

Phoenix Contact 2026 © - all rights reserved
https://www.phoenixcontact.com

Phoenix Contact USA
586 Fulling Mill Road
Middletown, PA 17057, United States
(+717) 944-1300
info@phoenixcon.com