FL-PP-RJ45/RJ45-B - Patch panel

2904933

https://www.phoenixcontact.com/us/products/2904933

Please be informed that the data shown in this PDF document is generated from our online catalog. Please find the complete data in the user documentation. Our general terms of use for downloads are valid.



Patch panel, narrow overall width, extended temperature range, two RJ45 jacks, 1:1 assignment, all-around shield, CAT5, 10/100 Mbps, DIN rail adapter, IP20

Product description

Ethernet patch panels enable quick and easy connection between the field cabling and control cabinet cabling. The passive termination panels are a convenient alternative to the on-site assembly of RJ45 connectors.

Your advantages

- CAT5e
- Mounting on a DIN rail
- 10/100 Mbps
- Easy and convenient extension for RJ45 cable
- 1:1 connection
- Extended temperature range of -40 °C ... 85 °C
- PoE-capable in accordance with IEEE 802.3bt, type 4
- Slim design

Commercial data

Item number	2904933
Packing unit	10 pc
Minimum order quantity	10 pc
Sales key	DN07
Product key	DNC331

GTIN	4046356900836
Weight per piece (including packing)	40.8 g
Weight per piece (excluding packing)	40 g
Customs tariff number	85366990
Country of origin	US

Technical data

Notes

Note on application

Note on application	Only for industrial use

Product properties

Product type	Patch panel

Interfaces

Data: Ethernet interface, 10/100/1000Base-T(X) in accordance with IEEE 802.3

Serial transmission speed	10/100 Mbps
Connection method	RJ45 jack
Note on the connection method	CAT5
No. of channels	1
Pin assignment	1:1
Transmission length	100 m (including patch cables)

Data: Ethernet interface, 10/100/1000Base-T(X) in accordance with IEEE 802.3

Connection method	RJ45 CAT5
No. of channels	1

Dimensions

Dimensional drawing	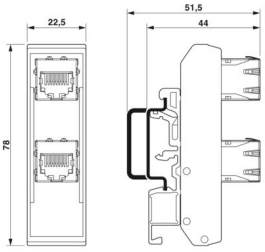
Width	22.5 mm
Height	78 mm
Depth	44 mm

Material specifications

Color (Housing)	green (RAL 6021)
Material (Housing)	PA 6.6-FR

Cable/line

Cable impedance	100 Ω

Mechanical properties

Mechanical data

Insertion/withdrawal cycles	≤ 2500

Mechanical tests

Vibration resistance in accordance with EN 60068-2-6/IEC 60068-2-6	Operation: 5g, 10...150 Hz, 2.5 h, in XYZ direction
Shock in accordance with EN 60068-2-27/IEC 60068-2-27	Operation: 25g, 11 ms period, half-sine shock pulse

Environmental and real-life conditions

Ambient conditions

Degree of protection	IP20
Ambient temperature (operation)	-40 °C ... 85 °C
Ambient temperature (storage/transport)	-40 °C ... 85 °C
Ambient temperature (assembly)	-40 °C ... 85 °C
Permissible humidity (operation)	25 % ... 95 % (non-condensing)

Approvals

Corrosive gas test

Identification	ISA-S71.04-1985 G3 Harsh Group A

Mounting

Mounting type	DIN rail mounting

Drawings

Dimensional drawing

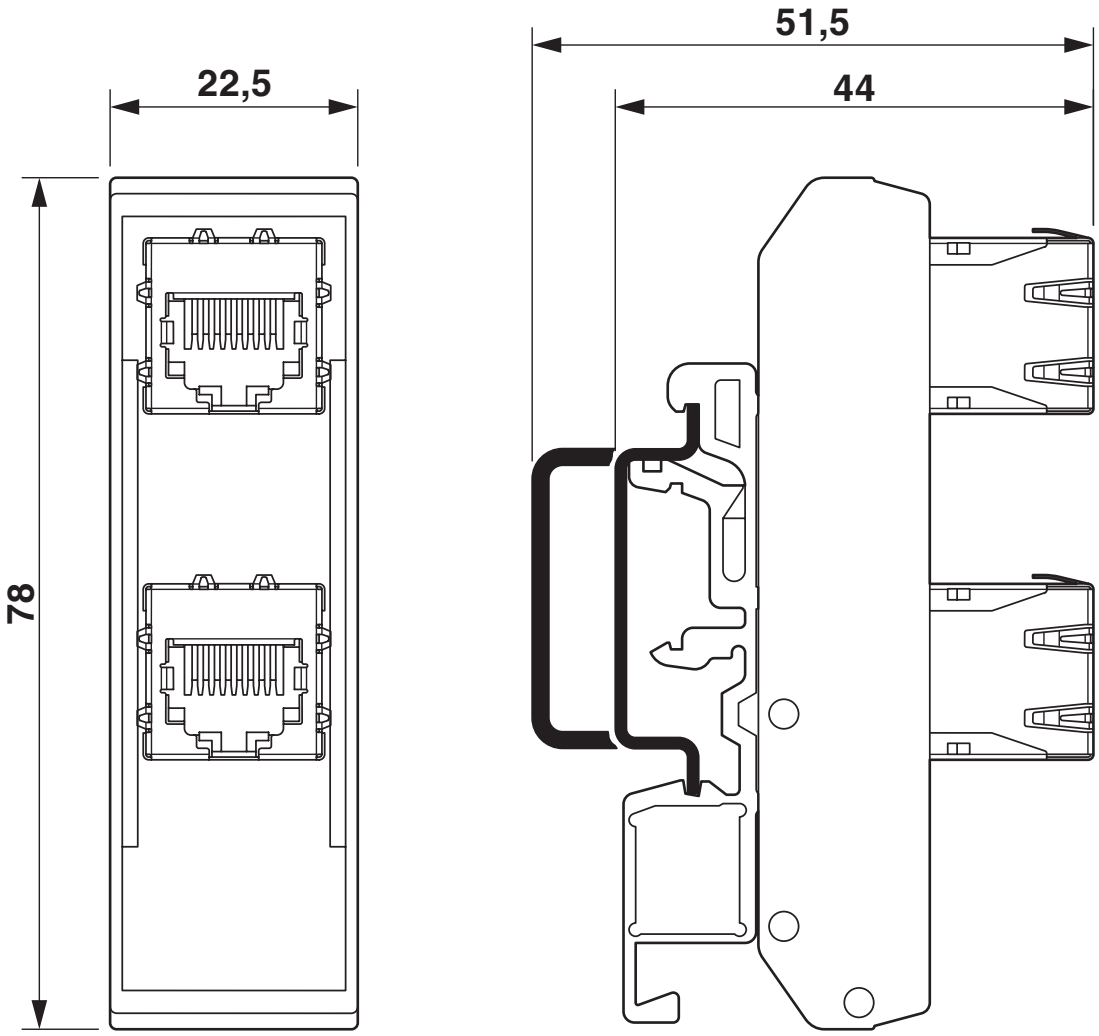

Slim design

Block diagram

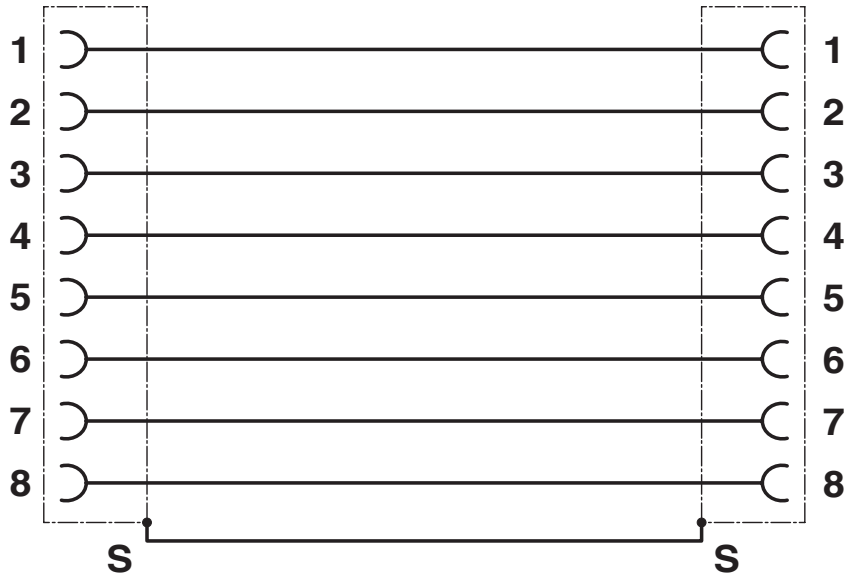

Circuit diagram

Classifications

ECLASS

ECLASS-13.0	19170112
ECLASS-15.0	19170112

ETIM

ETIM 10.0	EC001128

UNSPSC

UNSPSC 21.0	43223300

Environmental product compliance

EU RoHS

Fulfills EU RoHS substance requirements	Yes, No exemptions

China RoHS

Environment friendly use period (EFUP)	EFUP-E
	No hazardous substances above the limits

EU REACH SVHC

REACH candidate substance (CAS No.)	No substance above 0.1 wt%

Phoenix Contact 2026 © - all rights reserved
https://www.phoenixcontact.com

Phoenix Contact USA
586 Fulling Mill Road
Middletown, PA 17057, United States
(+717) 944-1300
info@phoenixcon.com