# QUINT4-PS/1AC/24DC/40 - Power supply

2904603

https://www.phoenixcontact.com/us/products/2904603

Please be informed that the data shown in this PDF document is generated from our online catalog. Please find the complete data in the user documentation. Our general terms of use for downloads are valid.



Primary-switched QUINT POWER power supply with free choice of output characteristic curve, SFB (selective fuse breaking) technology, and NFC interface, input: 1-phase, output: 24 V DC/40 A

## Product description

The fourth generation of the high-performance QUINT POWER power supplies ensures superior system availability by means of new functions. Signaling thresholds and characteristic curves can be individually adjusted via the NFC interface.
The unique SFB technology and preventive function monitoring of the QUINT POWER power supply increase the availability of your application.

## Your advantages

- Most powerful output side: easy system expansion, reliable heavy load startup and miniature circuit breaker tripping
- Most robust input side: high noise immunity, thanks to integrated gas-filled surge arrester (up to 6 kV) and ≥ 20 ms mains failure buffer time
- Most comprehensive signaling: preventive function monitoring reports critical operating states before errors occur
- Available pre-configured: from a batch quantity of just 1

ELEKTROGERÄTE RÜCKNAHME

## Commercial data

| | |
|---|---|
| Item number | 2904603 |
| Packing unit | 1 pc |
| Minimum order quantity | 1 pc |
| Sales key | CM10 |
| Product key | CMPI13 |
| GTIN | 4055626355092 |
| Weight per piece (including packing) | 3,250 g |
| Weight per piece (excluding packing) | 2,887 g |

| | |
|---|---|
| Customs tariff number | 85044095 |
| Country of origin | TH |

# Technical data

## Input data

| | |
|---|---|
| Control input (configurable) Rem | Output power ON/OFF (SLEEP MODE) |
| Default | Output power ON (>40 kΩ/24 V DC/open bridge between Rem and SGnd) |

AC operation

| | |
|---|---|
| Network type | Star network |
| Nominal input voltage range | 100 V AC ... 240 V AC |
| Input voltage range | 100 V AC ... 240 V AC -15 % ... +10 % |
| Electric strength, max. | 300 V AC 60 s |
| Typical national grid voltage | 120 V AC |
| | 230 V AC |
| Voltage type of supply voltage | AC |
| Inrush current | typ. 12 A (at 25 °C) |
| Inrush current integral ($I^2t$) | < 1 $A^2s$ |
| Inrush current limitation | 12 A (after 1 ms) |
| Frequency range ($f_N$) | 50 Hz ... 60 Hz -10 % ... +10 % |
| | 16.7 Hz (acc. to EN 50163) |
| Mains buffering time | typ. 29 ms (120 V AC) |
| | typ. 32 ms (230 V AC) |
| Current consumption | 13.6 A (100 V AC) |
| | 10 A (120 V AC) |
| | 5.2 A (230 V AC) |
| | 5.4 A (240 V AC) |
| Nominal power consumption | 1064 VA |
| Input fuse | 16 A (slow-blow, internal) |
| Recommended breaker for input protection | 16 A ... 20 A (Characteristic B, C, D, K or comparable) |
| Discharge current to PE | < 3.5 mA |
| | 1.7 mA (264 V AC, 60 Hz) |

DC operation

| | |
|---|---|
| Nominal input voltage range | 110 V DC ... 250 V DC |
| Input voltage range | 110 V DC ... 250 V DC -18 % ... +40 % |
| Voltage type of supply voltage | DC |
| Current consumption | 12 A (110 V DC) |
| | 5 A (250 V DC) |

## Output data

| | |
|---|---|
| Efficiency | typ. 94.8 % (120 V AC) |
| | typ. 95.9 % (230 V AC) |
| Nominal output voltage | 24 V DC |
| Setting range of the output voltage ($U_{Set}$) | 24 V DC ... 29.5 V DC (constant capacity) |

| | |
|---|---|
| Nominal output current ($I_N$) | 40 A |
| Static Boost ($I_{Stat.Boost}$) | 45 A |
| Dynamic Boost ($I_{Dyn.Boost}$) | 60 A (5 s) |
| Selective Fuse Breaking ($I_{SFB}$) | 215 A (15 ms) |
| Magnetic circuit breaker tripping | A1...A40 / B2...B25 / C1...C13 / Z1...Z16 |
| Derating | > 60 °C ... 70 °C (2.5 %/K) |
| Feedback voltage resistance | ≤ 35 V DC |
| Protection against overvoltage at the output (OVP) | ≤ 32 V DC |
| Control deviation | < 0.5 % (Static load change 10 % ... 90 %) |
| | < 1 % (Dynamic load change 10 % ... 90 %, (10 Hz)) |
| | < 0.25 % (change in input voltage ±10 %) |
| Residual ripple | < 50 $mV_{PP}$ (with nominal values) |
| Short-circuit-proof | yes |
| No-load proof | yes |
| Output power | 960 W |
| | 1080 W |
| | 1440 W |
| Maximum no-load power dissipation | < 4 W (120 V AC) |
| | < 4 W (230 V AC) |
| Power loss nominal load max. | < 50 W (120 V AC) |
| | < 50 W (230 V AC) |
| Power dissipation SLEEP MODE | < 3 W (120 V AC) |
| | < 3 W (230 V AC) |
| Crest factor | typ. 1.5 (120 V AC) |
| | typ. 1.6 (230 V AC) |
| Connection in parallel | yes, for redundancy and increased capacity |
| Connection in series | yes |
| Fuse protection (secondary side) | electronic |
| | thermal-magnetic |
| | thermal |

Signal

| | |
|---|---|
| Signal ground SGnd | Reference potential for Out1, Out2, and Rem |

Signal Out 1 (configurable)

| | |
|---|---|
| Digital | 24 V DC 20 mA |
| Default | 24 V DC 20 mA 24 V DC for $U_{Out}$ > 0.9 x $U_{Set}$ |

Signal Out 2 (configurable)

| | |
|---|---|
| Digital | 24 V DC 20 mA |
| Analog | 4 mA ... 20 mA ±5 % (Load ≤400 Ω) |
| Default | 24 V DC 20 mA 24 V DC for $P_{Out}$ < $P_N$ |

Signal relay 13/14 (configurable)

| | |
|---|---|
| Default | closed ($U_{out}$ > 0.9 $U_{Set}$) |
| Digital | 24 V DC 1 A |

| | |
|---|---|
| | 30 V AC/DC 0.5 A |

## Connection data

### Input

| | |
|---|---|
| Connection method | Screw connection |
| Conductor cross-section, rigid min. | 0.2 mm² |
| Conductor cross-section, rigid max. | 6 mm² |
| Conductor cross-section flexible min. | 0.2 mm² |
| Conductor cross-section flexible max. | 4 mm² |
| Single conductor/flexible terminal point with ferrule with plastic sleeve, min. | 0.25 mm² |
| Single conductor/flexible terminal point with ferrule with plastic sleeve, max. | 4 mm² |
| Single conductor/flexible terminal point with ferrule without plastic sleeve, min. | 0.25 mm² |
| Single conductor/flexible terminal point with ferrule without plastic sleeve, max. | 4 mm² |
| Conductor cross-section AWG min. | 24 |
| Conductor cross-section AWG max. | 10 |
| Stripping length | 8 mm |
| Tightening torque, min | 0.5 Nm |
| Tightening torque max | 0.6 Nm |

### Output

| | |
|---|---|
| Connection method | Screw connection |
| Conductor cross-section, rigid min. | 0.5 mm² |
| Conductor cross-section, rigid max. | 16 mm² |
| Conductor cross-section flexible min. | 0.5 mm² |
| Conductor cross-section flexible max. | 16 mm² |
| Single conductor/flexible terminal point with ferrule with plastic sleeve, min. | 0.5 mm² |
| Single conductor/flexible terminal point with ferrule with plastic sleeve, max. | 16 mm² |
| Single conductor/flexible terminal point with ferrule without plastic sleeve, min. | 0.5 mm² |
| Single conductor/flexible terminal point with ferrule without plastic sleeve, max. | 16 mm² |
| Conductor cross-section AWG min. | 20 |
| Conductor cross-section AWG max. | 6 |
| Stripping length | 10 mm |
| Tightening torque, min | 1.2 Nm |
| Tightening torque max | 1.5 Nm |

### Signal

| | |
|---|---|
| Connection method | Push-in connection |
| Conductor cross-section, rigid min. | 0.2 mm² |
| Conductor cross-section, rigid max. | 1 mm² |

| | |
|---|---|
| Conductor cross-section flexible min. | 0.2 mm² |
| Conductor cross-section flexible max. | 1.5 mm² |
| Single conductor/flexible terminal point with ferrule with plastic sleeve, min. | 0.2 mm² |
| Single conductor/flexible terminal point with ferrule with plastic sleeve, max. | 0.75 mm² |
| Single conductor/flexible terminal point with ferrule without plastic sleeve, min. | 0.2 mm² |
| Single conductor/flexible terminal point with ferrule without plastic sleeve, max. | 1.5 mm² |
| Conductor cross-section AWG min. | 24 |
| Conductor cross-section AWG max. | 16 |
| Stripping length | 8 mm |

## Signaling

| | |
|---|---|
| Types of signaling | LED |
| | Floating signal contact |
| | Active signal output Out1 (digital, configurable) |
| | Active signal output Out2 (analog, configurable) |
| | Remote contact |
| | Signal ground SGnd |

Signal output

| | |
|---|---|
| Signal option | Output current |
| | Output voltage |
| | Output power |
| | $U_{IN}$ input voltage OK |
| | Operating hours |
| | Early warning of high temperatures |
| | OVP voltage limitation active |
| $P_{Out}$ | > 100 % (LED lights up yellow, output power > 960 W) |
| | > 75 % (LED lights up green, output power > 720 W) |
| | > 50 % (LED lights up green, output power > 480 W) |
| $U_{Out}$ | > 0.9 x $U_{Set}$ (LED lights up green) |
| | < 0.9 x $U_{Set}$ (LED flashes green) |

## Electrical properties

| | |
|---|---|
| Number of phases | 1 |
| Insulation voltage input/output | 4 kV AC (type test) |
| | 2 kV AC (routine test) |
| Insulation voltage output / PE | 0.5 kV DC (type test) |
| | 0.5 kV DC (routine test) |
| Insulation voltage input / PE | 2.5 kV AC (type test) |
| | 2.4 kV AC (routine test) |
| Switching frequency | 85.00 kHz ... 107.00 kHz (Auxiliary converter stage) |
| | 45.00 kHz ... 200.00 kHz (Main converter stage) |

| | |
|---|---|
| | 50.00 kHz ... 500.00 kHz (PFC stage) |

## Product properties

| | |
|---|---|
| Product type | Power supply |
| Product family | QUINT POWER |
| MTBF (IEC 61709, SN 29500) | > 934000 h (25 °C) |
| | > 555000 h (40 °C) |
| | > 249000 h (60 °C) |
| Environmental protection directive | RoHS Directive 2011/65/EU |
| | WEEE |
| | Reach |

### Insulation characteristics

| | |
|---|---|
| Protection class | I |
| Overvoltage category (EN 61010-1) | II (≤ 5000 m) |
| Overvoltage category (EN 62477-1) | III (≤ 2000 m) |
| Degree of pollution | 2 |

### Life expectancy (electrolytic capacitors)

| | |
|---|---|
| Current | 20 A |
| Temperature | 40 °C |
| Time | 394000 h |
| Additional text | 120 V AC |

### Life expectancy (electrolytic capacitors)

| | |
|---|---|
| Current | 20 A |
| Temperature | 40 °C |
| Time | 452000 h |
| Additional text | 230 V AC |

### Life expectancy (electrolytic capacitors)

| | |
|---|---|
| Current | 40 A |
| Temperature | 25 °C |
| Time | 320000 h |
| Additional text | 120 V AC |

### Life expectancy (electrolytic capacitors)

| | |
|---|---|
| Current | 40 A |
| Temperature | 25 °C |
| Time | 422000 h |
| Additional text | 230 V AC |

### Life expectancy (electrolytic capacitors)

| | |
|---|---|
| Current | 40 A |
| Temperature | 40 °C |
| Time | 113000 h |
| Additional text | 120 V AC |

Life expectancy (electrolytic capacitors)

| | |
|---|---|
| Current | 40 A |
| Temperature | 40 °C |
| Time | 149000 h |
| Additional text | 230 V AC |

## Dimensions

| | |
|---|---|
| Width | 120 mm |
| Height | 130 mm |
| Depth | 140 mm |

Installation dimensions

| | |
|---|---|
| Installation distance right/left | 5 mm / 5 mm |
| Installation distance top/bottom | 50 mm / 50 mm |

## Mounting

| | |
|---|---|
| Mounting type | DIN rail: 35 mm |
| Mounting position | horizontal DIN rail NS 35, EN 60715 |
| With protective coating | no |

## Material specifications

| | |
|---|---|
| Flammability rating according to UL 94 (housing / terminal blocks) | V0 |
| Housing material | Metal |
| Hood version | Stainless steel X6Cr17 |
| Side element version | Aluminum |

## Environmental and real-life conditions

Ambient conditions

| | |
|---|---|
| Degree of protection | IP20 |
| Ambient temperature (operation) | -25 °C ... 70 °C (> 60 °C Derating: 2,5 %/K) |
| Ambient temperature (storage/transport) | -40 °C ... 85 °C |
| Ambient temperature (start-up type tested) | -40 °C |
| Maximum altitude | ≤ 5000 m (> 2000 m, observe derating) |
| Climatic class | 3K3 (in acc. with EN 60721) |
| Max. permissible relative humidity (operation) | ≤ 95 % (at 25 °C, non-condensing) |
| Shock | 11 ms, 15 g, in each space direction (according to IEC 60068-2-27) |
| Vibration (operation) | 5 Hz ... 100 Hz resonance search 0.7g, 90 min., resonance frequency 0.7g, 90 min. (in accordance with DNV GL Class A) |
| Temp code | T4 (-25 ... +70 °C; > 60 °C, Derating: 2,5 %/K) |

## Standards and regulations

| | |
|---|---|
| Rail applications | EN 50121-3-2 |
| | EN 50121-4 |

| | |
|---|---|
| | EN 50121-5 |
| | EN 50163 |
| | IEC 62236-3-2 |
| | IEC 62236-4 |
| | IEC 62236-5 |
| HART FSK Physical Layer Test Specification Compliance | Output voltage $U_{Out}$ compliant |
| Standard – Limitation of mains harmonic currents | EN 61000-3-2 |
| Standard - Electrical safety | IEC 61010-2-201 (SELV) |
| Standard – Safety extra-low voltage | IEC 61010-1 (SELV) |
| | IEC 61010-2-201 (PELV) |
| Standard - Safe isolation | IEC 61558-2-16 |
| | IEC 61010-2-201 |
| Standard - safety for equipment for measurement, control, and laboratory use | IEC 61010-1 |
| Standard - Safety of transformers | EN 61558-2-16 |
| Battery charging | DIN 41773-1 |
| Approval - requirement of the semiconductor industry with regard to mains voltage dips | SEMI F47-0706, EN 61000-4-11 |

## Approvals

| | |
|---|---|
| CSA | CAN/CSA-C22.2 No. 60950-1-07 |
| | CSA-C22.2 No. 107.1-01 |
| Shipbuilding approval | DNV GL |
| SIQ | BG (type approved) |
| UL approvals | UL Listed UL 508 |
| | UL 121201 & CSA C22.2 No. 213-17 Class I, Division 2, Groups A, B, C, D T4 (Hazardous Location) |

## EMC data

| | |
|---|---|
| Electromagnetic compatibility | Conformance with EMC Directive 2014/30/EU |
| Low Voltage Directive | Conformance with Low Voltage Directive 2014/35/EC |
| EMC requirements for noise emission | EN 61000-6-3 |
| | EN 61000-6-4 |
| EMC requirements for noise immunity | EN 61000-6-1 |
| | EN 61000-6-2 |
| EMC requirements for power supply | IEC 61850-3 (G,H) |
| | EN 61000-6-5 (switching devices) |

Conducted noise emission

| | |
|---|---|
| Standards/regulations | EN 55016 |
| | EN 61000-6-3 (Class B) |

Noise emission

| | |
|---|---|
| Standards/regulations | Additional basic standard EN 61000-6-5 (immunity in switching devices), IEC/EN 61850-3 (power supply) |

Noise emission

| | |
|---|---|
| Standards/regulations | EN 55016 |
| | EN 61000-6-3 (Class B) |

DNV GL conducted noise emissions

| | |
|---|---|
| DNV | Class A |
| Additional text | Area power distribution |

DNV GL noise radiation

| | |
|---|---|
| DNV | Class B |
| Additional text | Bridge and deck area |

Harmonic currents

| | |
|---|---|
| Standards/regulations | EN 61000-3-2 |
| | EN 61000-3-2 (Class A) |
| Frequency range | 0 kHz ... 2 kHz |

Flicker

| | |
|---|---|
| Standards/regulations | EN 61000-3-3 |
| | EN 61000-3-3 |
| Frequency range | 0 kHz ... 2 kHz |

Electrostatic discharge

| | |
|---|---|
| Standards/regulations | EN 61000-4-2 |

Electrostatic discharge

| | |
|---|---|
| Contact discharge | 8 kV (Test Level 4) |
| Discharge in air | 15 kV (Test Level 4) |
| Comments | Criterion A |

Electromagnetic HF field

| | |
|---|---|
| Standards/regulations | EN 61000-4-3 |

Electromagnetic HF field

| | |
|---|---|
| Frequency range | 80 MHz ... 1 GHz |
| Test field strength | 20 V/m (Test Level 3) |
| Frequency range | 1 GHz ... 6 GHz |
| Test field strength | 10 V/m (Test Level 3) |
| Comments | Criterion A |

Fast transients (burst)

| | |
|---|---|
| Standards/regulations | EN 61000-4-4 |

Fast transients (burst)

| | |
|---|---|
| Input | 4 kV (Test Level 4 - asymmetrical) |
| Output | 4 kV (Test Level 4 - asymmetrical) |
| Signal | 4 kV (Test Level 4 - asymmetrical) |
| Comments | Criterion A |

Surge voltage load (surge)

| | |
|---|---|
| Standards/regulations | EN 61000-4-5 |

Surge voltage load (surge)

| | |
|---|---|
| Input | typ. 3 kV (Test Level 4 - symmetrical) |
| | typ. 6 kV (Test Level 4 - asymmetrical) |
| Output | 1 kV (Test Level 3 - symmetrical) |
| | 2 kV (Test Level 3 - asymmetrical) |
| Signal | 4 kV (Test Level 4 - asymmetrical) |
| Comments | Criterion A |

Conducted interference

| | |
|---|---|
| Standards/regulations | EN 61000-4-6 |

Conducted interference

| | |
|---|---|
| Input/output/signal | asymmetrical |
| Frequency range | 0.15 MHz ... 80 MHz |
| Comments | Criterion A |
| Voltage | 10 V (Test Level 3) |

Power frequency magnetic field

| | |
|---|---|
| Standards/regulations | EN 61000-4-8 |
| Frequency | 16.7 Hz |
| | 50 Hz |
| | 60 Hz |
| Test field strength | 100 A/m |
| Additional text | 60 s |
| Comments | Criterion A |
| Frequency | 50 Hz |
| | 60 Hz |
| Frequency range | 50 Hz ... 60 Hz |
| Test field strength | 1 kA/m |
| Additional text | 3 s |
| Frequency | 0 Hz |
| Test field strength | 300 A/m |
| Additional text | DC, 60 s |

Voltage dips

| | |
|---|---|
| Standards/regulations | EN 61000-4-11 |
| Voltage | 230 V AC |
| Frequency | 50 Hz |
| Voltage dip | 70 % |
| Number of periods | 0.5 / 1 / 25 / 30 periods |
| Additional text | Test Level 2 |
| Comments | Criterion A: 0.5 / 1 / 25 / 30 periods |
| Voltage dip | 40 % |
| Number of periods | 5 / 10 / 50 periods |

| | |
|---|---|
| Additional text | Test Level 2 |
| Comments | Criterion A |
| Voltage dip | 0 % |
| Number of periods | 0,5 / 1 / 5 / 50 / 250 periods |
| Additional text | Test Level 2 |
| Comments | Criterion A: 0.5 / 1 period<br>Criterion B: 5 / 50 / 250 periods |

Pulse-shape magnetic field

| | |
|---|---|
| Standards/regulations | EN 61000-4-9 |
| Test field strength | 1000 A/m |
| Comments | Criterion A |

Attenuated sinusoidal oscillations (ring wave)

| | |
|---|---|
| Standards/regulations | EN 61000-4-12 |
| Input | 2 kV (Test Level 4 - symmetrical) |
| | 4 kV (Test Level 4 - asymmetrical) |
| Comments | Criterion A |

Asymmetrical conducted disturbance variables

| | |
|---|---|
| Standards/regulations | EN 61000-4-16 |
| Test level 1 | 15 Hz 150 Hz (Test Level 4) |
| Voltage | 30 V 3 V |
| Test level 2 | 150 Hz 1.5 kHz (Test Level 4) |
| Voltage | 3 V |
| Test level 3 | 1.5 kHz 15 kHz (Test Level 4) |
| Voltage | 3 V 30 V |
| Test level 4 | 15 kHz 150 kHz (Test Level 4) |
| Voltage | 30 V |
| Test level 5 | 16.7 Hz 50 Hz 60 Hz (Test Level 4) |
| Voltage | 30 V (Permanent) |
| Test level 6 | 150 Hz 180 Hz (Test Level 4) |
| Voltage | 30 V (Permanent) |
| Test level 7 | 16.7 Hz 50 Hz 60 Hz (Test Level 4) |
| Voltage | 300 V (1 s) |
| Comments | Criterion A |

Attenuated oscillating wave

| | |
|---|---|
| Standards/regulations | EN 61000-4-18 |
| Input, output (test level 1) | 100 kHz 1 MHz (Test Level 3 - symmetrical) |
| Voltage | 1 kV |
| Input, output (test level 2) | 10 MHz |
| Voltage | 1 kV |
| Input, output (test level 3) | 100 kHz 1 MHz (Test Level 3 - asymmetrical) |
| Voltage | 2.5 kV |
| Signals (test level 1) | 100 kHz 1 MHz (Test Level 3 - symmetrical) |

| | |
|---|---|
| Voltage | 1 kV |
| Signals (test level 2) | 100 kHz 1 MHz (Test Level 3 - asymmetrical) |
| Voltage | 2.5 kV |
| Comments | Criterion A |

Attenuated oscillating magnetic field

| | |
|---|---|
| Standards/regulations | EN 61000-4-10 |
| Test field strength | 110 A/m |
| Test level 1 | 100 kHz |
| Test field strength | 110 A/m |
| Test level 2 | 1 MHz |
| Comments | Criterion A |

Criteria

| | |
|---|---|
| Criterion A | Normal operating behavior within the specified limits. |
| Criterion B | Temporary impairment to operational behavior that is corrected by the device itself. |
| Criterion C | Temporary adverse effects on the operating behavior, which the device corrects automatically or which can be restored by actuating the operating elements. |

## Drawings

Schematic diagram

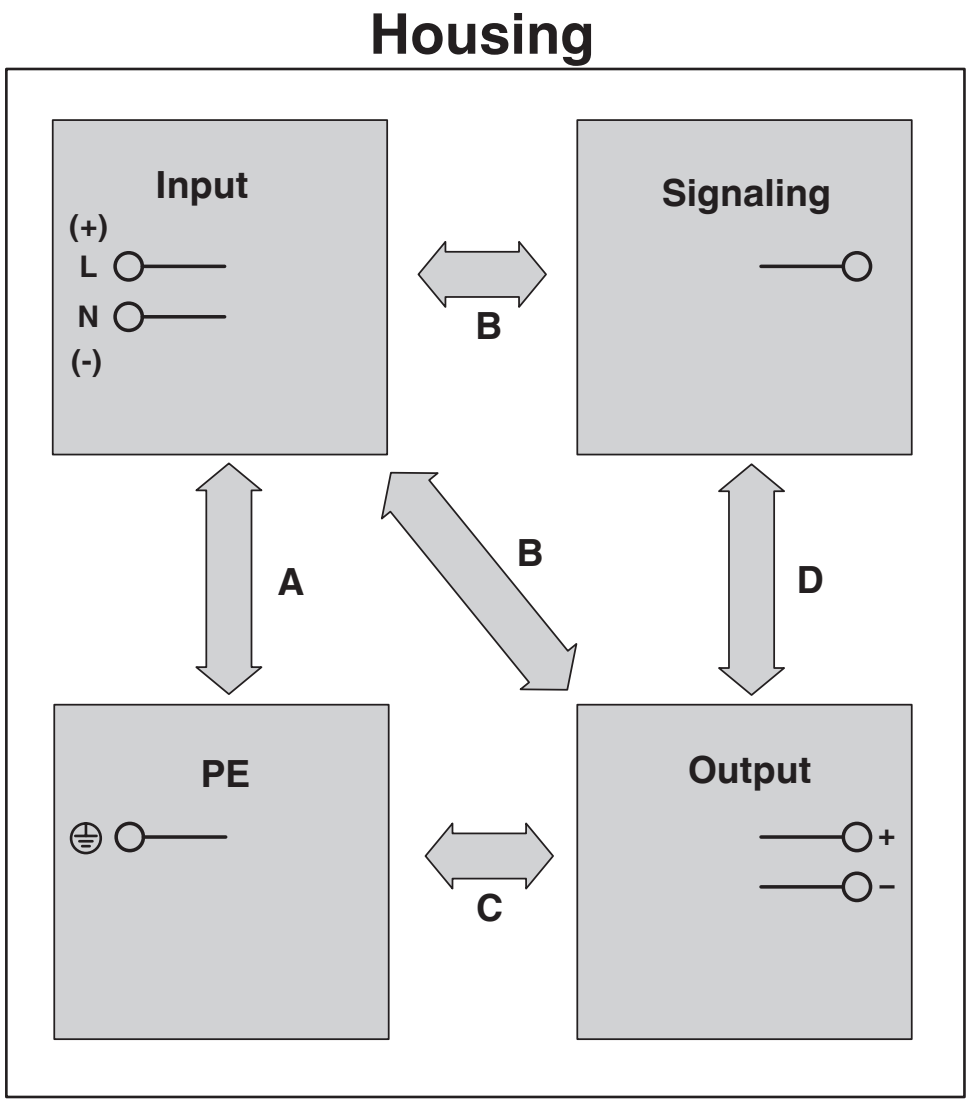

Diagram

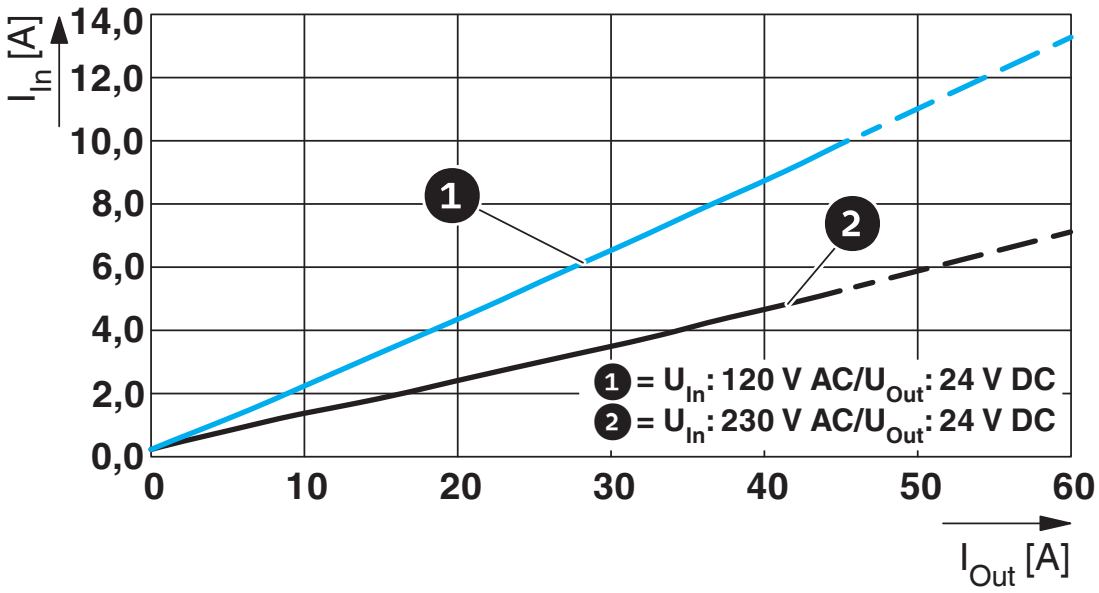


Diagram

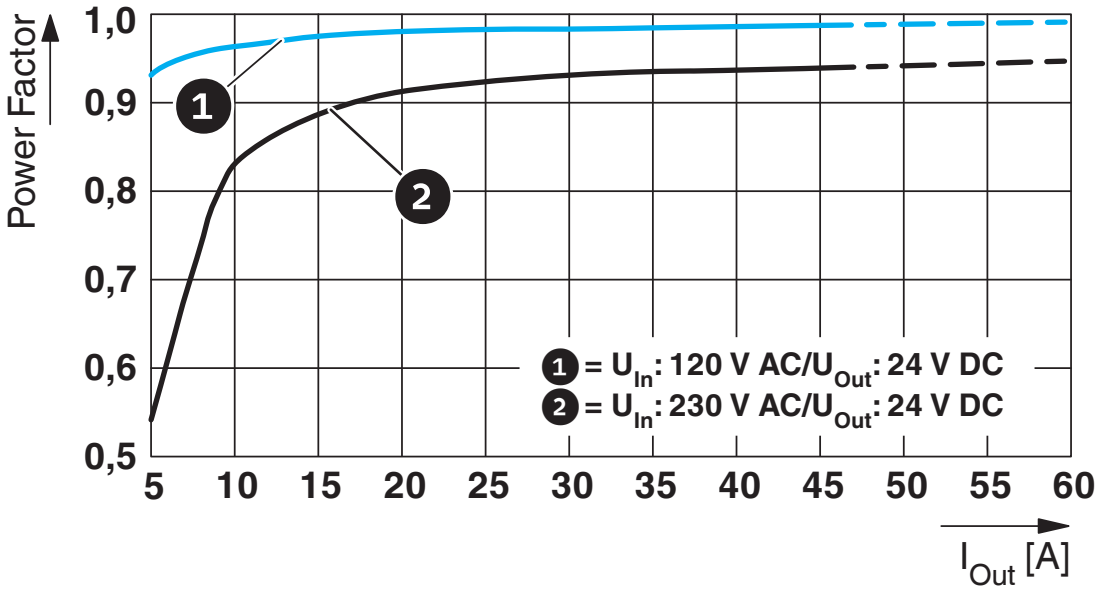

Diagram

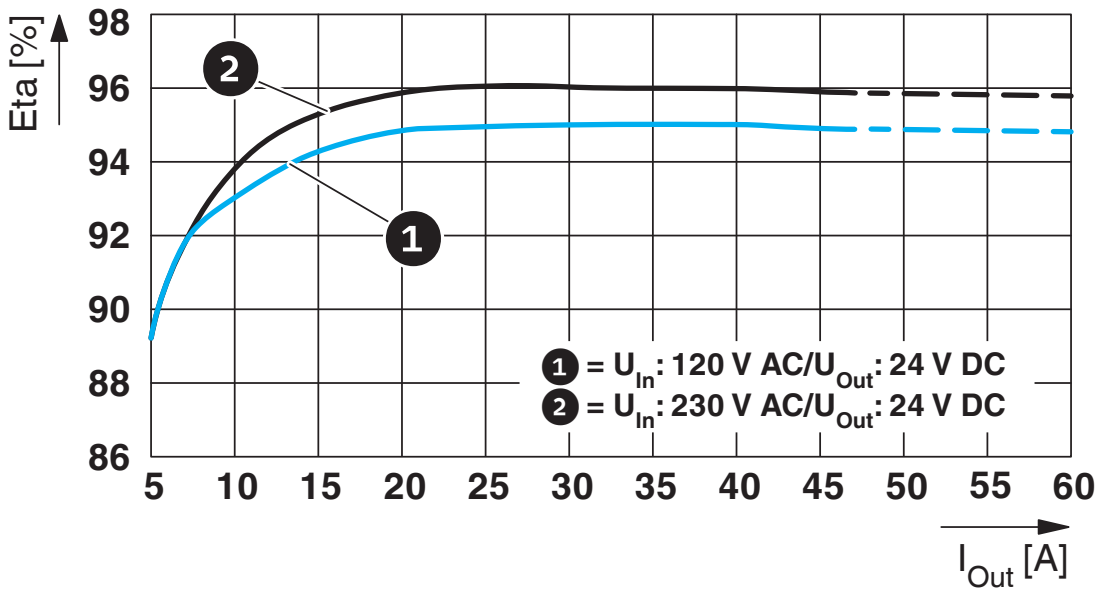


Block diagram

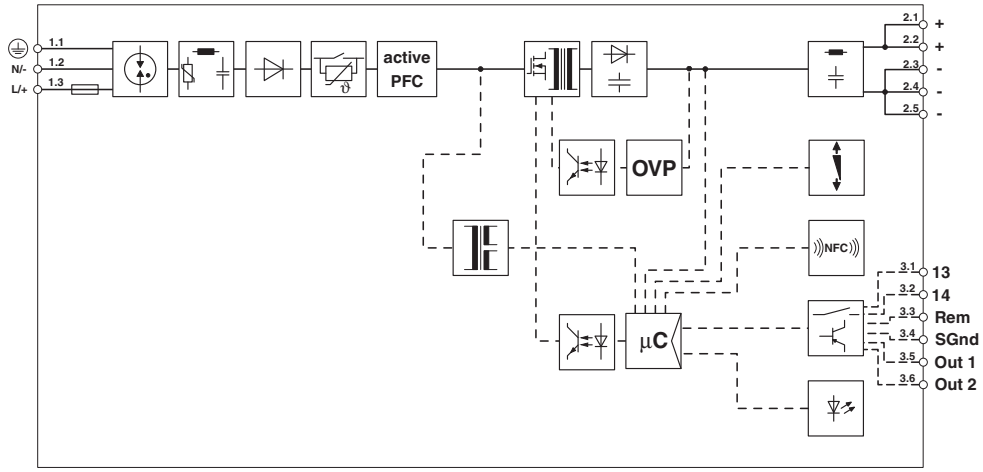

## Approvals

To download certificates, visit the product detail page: https://www.phoenixcontact.com/us/products/2904603

**cUL Recognized**
Approval ID: FILE E 211944

**UL Recognized**
Approval ID: FILE E 211944

**IECEE CB Scheme**
Approval ID: SI-7434

**LR**
Approval ID: LR22472797TA

**NK**
Approval ID: TA21182M

**ABS**
Approval ID: 26-0442641-PDA

**cULus Listed**
Approval ID: FILE E 123528

**DNV**
Approval ID: TAA00001YD

**BV**
Approval ID: 44621/B1 BV

**cCSAus**
Approval ID: 80017552

**SEMI F47**
Approval ID: SEMI F47

**cCSAus**
Approval ID: 80105395

**cUL Listed**
Approval ID: FILE E 199827

**UL Listed**
Approval ID: FILE E 199827

## Classifications

### ECLASS

| | |
|---|---|
| ECLASS-13.0 | 27040701 |
| ECLASS-15.0 | 27040701 |

### ETIM

| | |
|---|---|
| ETIM 10.0 | EC002540 |

### UNSPSC

| | |
|---|---|
| UNSPSC 21.0 | 39121000 |

## Environmental product compliance

EU RoHS

| | |
|---|---|
| Fulfills EU RoHS substance requirements | Yes |
| Exemption | 7(a), 7(c)-I |

China RoHS

| | |
|---|---|
| Environment friendly use period (EFUP) | EFUP-25 |
| | An article-related China RoHS declaration table can be found in the download area for the respective article under "Manufacturer declaration". For all articles with EFUP-E, no China RoHS declaration table issued and required. |

EU REACH SVHC

| | |
|---|---|
| REACH candidate substance (CAS No.) | Lead(CAS: 7439-92-1) |
| SCIP | 4654ca05-2cdc-49da-8da0-92691aa78cca |

EF3.1 Climate Change

| | |
|---|---|
| CO2e kg | 63.176 kg CO2e |


Phoenix Contact 2026 © - all rights reserved
https://www.phoenixcontact.com



Phoenix Contact USA
586 Fulling Mill Road
Middletown, PA 17057, United States
(+717) 944-1300
info@phoenixcon.com