VIP-2/PT/D 9SUB/M/LED - Termination board

2904258

https://www.phoenixcontact.com/us/products/2904258

Please be informed that the data shown in this PDF document is generated from our online catalog. Please find the complete data in the user documentation. Our general terms of use for downloads are valid.



VARIOFACE module, with push-in connection and D-SUB miniature pin strip, for mounting on NS 35 rails, with LED, 9-pos.

Commercial data

Item number	2904258
Packing unit	1 pc
Minimum order quantity	1 pc
Sales key	C423
Product key	DK2122
GTIN	4046356883856
Weight per piece (including packing)	91.4 g
Weight per piece (excluding packing)	91.4 g
Customs tariff number	85366990
Country of origin	US

Technical data

Product properties

Product type	Interface module
Product family	VARIOFACE Professional
Number of positions	9

Insulation characteristics

Overvoltage category	II
Pollution degree	2

Electrical properties

Operating voltage (DC)	24 V DC
Current (per branch)	≤ 2 A
Rated surge voltage	1.2 kV

Connection data

Field level

Connection method	Push-in connection
Stripping length	8 mm
Conductor cross-section rigid	0.14 mm² ... 2.5 mm²
Conductor cross-section flexible	0.14 mm² ... 2.5 mm²
Conductor cross-section AWG	26 ... 14

Controller level

Connection method	D-SUB pin strip
Number of connections	1
Number of positions	9

Signaling

Status display	LED
Status display present	yes

Dimensions

Item dimensions

Width	36.8 mm
Height	72.1 mm
Depth	46.6 mm

Material specifications

Color	gray (RAL 7042)
Housing insulation material	Polyamide PA non-reinforced

Environmental and real-life conditions

Ambient conditions

Ambient temperature (operation)	-20 °C ... 50 °C
Ambient temperature (storage/transport)	-20 °C ... 70 °C

Standards and regulations

Standards/regulations	IEC 60664
	DIN EN 50178

Mounting

Mounting type	DIN rail mounting
Mounting position	any

Notes

Notes on operation	For proper use, the specifications of the installation directive (see Downloads) must be observed. For applications or use with third-party products, the specifications, and the safety and warning instructions of the respective third-party manufacturer must also be met.

Drawings

Circuit diagram

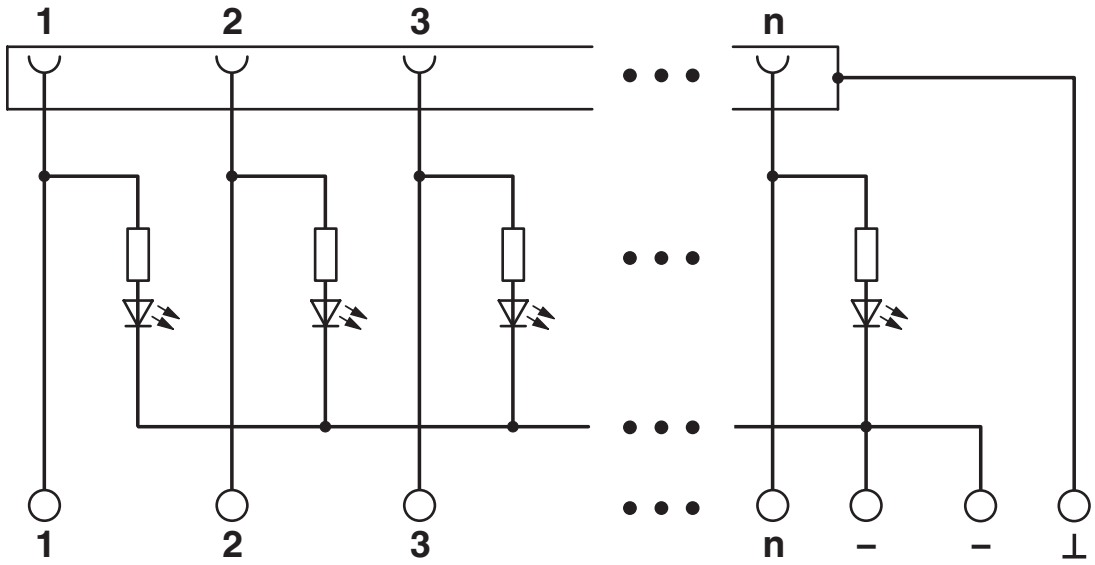

Approvals

To download certificates, visit the product detail page: https://www.phoenixcontact.com/us/products/2904258

CSA
Approval ID: 2122203

	Nominal voltage U_N	Nominal current I_N	Cross section AWG	Cross section mm^2
keine				
	24 V	2 A	26 - 14	-

cUL Recognized
Approval ID: E238705

	Nominal voltage U_N	Nominal current I_N	Cross section AWG	Cross section mm^2
keine				
	24 V	2 A	26 - 14	-

UL Recognized
Approval ID: E238705

	Nominal voltage U_N	Nominal current I_N	Cross section AWG	Cross section mm^2
keine				
	24 V	2 A	26 - 14	-

CSAus
Approval ID: 2122203

	Nominal voltage U_N	Nominal current I_N	Cross section AWG	Cross section mm^2
keine				
	24 V	2 A	26 - 14	-

Classifications

ECLASS

ECLASS-13.0	27141152
ECLASS-15.0	27141152

ETIM

ETIM 10.0	EC002780

UNSPSC

UNSPSC 21.0	39121400

Environmental product compliance

EU RoHS

Fulfills EU RoHS substance requirements	Yes
Exemption	6(c), 7(c)-I

China RoHS

Environment friendly use period (EFUP)	EFUP-50
	An article-related China RoHS declaration table can be found in the download area for the respective article under "Manufacturer declaration". For all articles with EFUP-E, no China RoHS declaration table issued and required.

EU REACH SVHC

REACH candidate substance (CAS No.)	Lead(CAS: 7439-92-1)
SCIP	3f19795e-9747-4855-a60d-7b994677232e

Phoenix Contact 2026 © - all rights reserved
https://www.phoenixcontact.com

Phoenix Contact USA
586 Fulling Mill Road
Middletown, PA 17057, United States
(+717) 944-1300
info@phoenixcon.com