ELR H3-IES-PT- 24DC/500AC-9 - Hybrid motor starter

2903918

https://www.phoenixcontact.com/us/products/2903918

Please be informed that the data shown in this PDF document is generated from our online catalog. Please find the complete data in the user documentation. Our general terms of use for downloads are valid.



Hybrid motor starter for starting 3~ AC motors up to 500 V AC and 9 A output current, with 24 V DC control voltage, adjustable overload shutdown, emergency stop function to SIL 3/PL e, and push-in connection.

Your advantages

- 22.5 mm wide
- Safety level in accordance with IEC 61508-1: SIL 3, ISO 13849: PL e
- Reduction in wiring
- Space saving
- Long service life
- 3-phase loop bridges
- Adjustable current for bimetal function
- Low-wear switching

Commercial data

Item number	2903918
Packing unit	1 pc
Minimum order quantity	1 pc
Sales key	C470
Product key	DK7413
GTIN	4046356771412
Weight per piece (including packing)	226.97 g
Weight per piece (excluding packing)	203.69 g
Customs tariff number	85371098
Country of origin	DE

Technical data

Notes

Notes on operation	If this device is to be used in combination with the CrossPowerSystem power distribution board, the device mount for the 16 A fuse (order designation: EM-CPS-DA-22,5F/16A; order number: 1002668) is required in order to attach the hybrid motor starter to the power distribution board.

Product properties

Product type	Hybrid motor starters
Product family	CONTACTRON
Operating mode	100% operating factor

Electrical properties

Number of phases	3
Motor starter type	Direct starter
Switching frequency	≤ 2 Hz (Load-dependent)
Maximum power dissipation for nominal condition	13.5 W
Switching frequency	≤ 2 Hz (Load-dependent)
Maximum power dissipation	14.6 W
Minimum power dissipation	1.1 W
Coordination type	1

Supply

Rated control circuit supply voltage U_S	24 V DC
Control supply voltage range	19.2 V DC ... 30 V DC
Rated control supply current I_S	40 mA
Protective circuit	Surge protection
	Reverse polarity protection

Insulation characteristics

Rated insulation voltage	500 V
Rated surge voltage	6 kV
Overvoltage category	III
Degree of pollution	2
Insulation characteristics between the control input and control supply voltage, and auxiliary circuit to the main circuit	Safe isolation (IEC 60947-1) at operating voltage ≤ 300 V AC
	Basic insulation (IEC 60947-1) at operating voltage 300 V AC ... 500 V AC
Isolation characteristics between the control input and control supply voltage to auxiliary circuit	Safe isolation (IEC 60947-1) in the auxiliary circuit ≤ 300 V AC

Emergency tripping

Operate threshold	> 45 A
Response time	2 s

Input data

Control

Input name	Control input
Rated actuating voltage U_C	24 V DC
Triggering voltage range	19.2 V DC ... 30 V DC
Rated actuating current I_C	5 mA (Input type 1)
Switching threshold	9.6 V (“0” signal)
	19.2 V (“1” signal)
Switching level	< 5 V DC (For EMERGENCY STOP)
Typical turn-off time	< 30 ms
Protective circuit	Reverse polarity protection

Output data

AC output

Note	800 V semiconductor
Rated operating voltage U_e	500 V AC
Operating voltage range	42 V AC ... 550 V AC
Rated operating current I_e	9 A (AC-51)
	6.5 A (AC-53a)
Mains frequency	50/60 Hz
Load current range	1.5 A ... 9 A (see to derating)
Trigger characteristic in acc. with IEC 60947-4-2	Class 10A
Cooling time	20 min (for auto reset)
Leakage current	0 mA
Protective circuit	Surge protection

Acknowledge output

Note	Confirmation: floating change-over contact, signal contact
Contact switching type	1 changeover contact
Switching capacity in accordance with IEC 60947-5-1	3 A (230 V, AC15)
	2 A (24 V (DC13))

Connection data

Control circuits

Connection method	Push-in connection
Stripping length	10 mm
Conductor cross-section rigid	0.2 mm² ... 2.5 mm²
Conductor cross-section flexible	0.2 mm² ... 2.5 mm²
Conductor cross-section AWG	24 ... 14

Load circuit

Connection method	Push-in connection
Stripping length	10 mm
Conductor cross-section rigid	0.2 mm² ... 2.5 mm²
Conductor cross-section flexible	0.2 mm² ... 2.5 mm²

Conductor cross-section AWG	24 ... 14

Signaling

Status display	LED (yellow)
Operating voltage display	Green LED
Error indication	Red LED

Dimensions

Width	22.5 mm
Height	107.5 mm
Depth	114 mm

Material specifications

Flammability rating according to UL 94 (Housing)	V0 (Housing)

Environmental and real-life conditions

Ambient conditions

Degree of protection	IP20
Ambient temperature (operation)	-25 °C ... 70 °C (observe derating)
Ambient temperature (storage/transport)	-40 °C ... 80 °C
Altitude	≤ 2000 m

Approvals

ATEX

Identification	Ⓔx II (2) G [Ex e] [Ex d] [Ex px]
	Ⓔx II (2) D [Ex t] [Ex p]
Certificate	PTB 07 ATEX 3145

UL approval

Certificate	NLDX.E228652

Safety Integrity Level (SIL, IEC 61508)

Identification	≤ 3
Note	Safe shutdown

Safety Integrity Level (SIL, IEC 61508)

Identification	2
Note	Motor protection

Performance Level (ISO 13849)

Identification	≤ e
Note	Safe shutdown

Category (ISO 13849)

Identification	≤ 3
Note	Safe shutdown

UL data

SCCR	100 kA (500 V AC (fuse: 30 A class CC/30 A class J (high fault)))
	5 kA (500 V AC (fuse: 20 A RK5 (standard fault)))
FLA	6.5 A (500 V AC)
Group installation	20 A (class RK5, SCCR 5kA, #24 - 14 AWG max. solid and stranded)
	30 A (class CC or J, SCCR 100kA, #24 - 14 AWG max, solid and stranded)
Category code	NLDX

Standards and regulations

Standards/regulations

Standards/regulations	IEC 60947-1
	IEC 60947-4-2
	IEC 61508
	ISO 13849

Mounting

Mounting type	DIN rail mounting
Assembly note	alignable, for spacing see derating
Mounting position	vertical (horizontal DIN rail, motor output below)

Drawings

Diagram

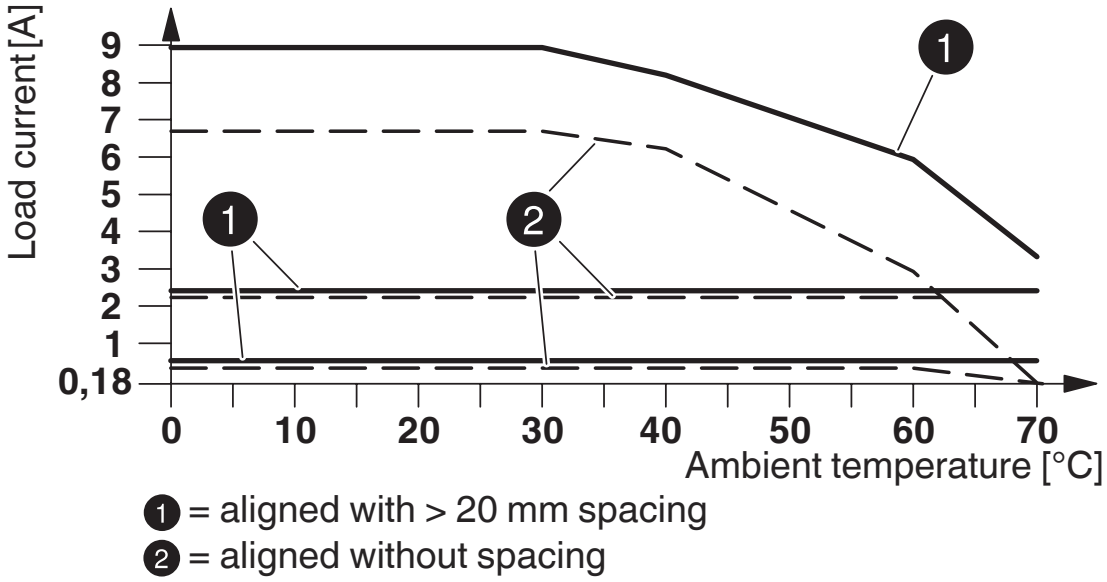

Derating diagram

Circuit diagram

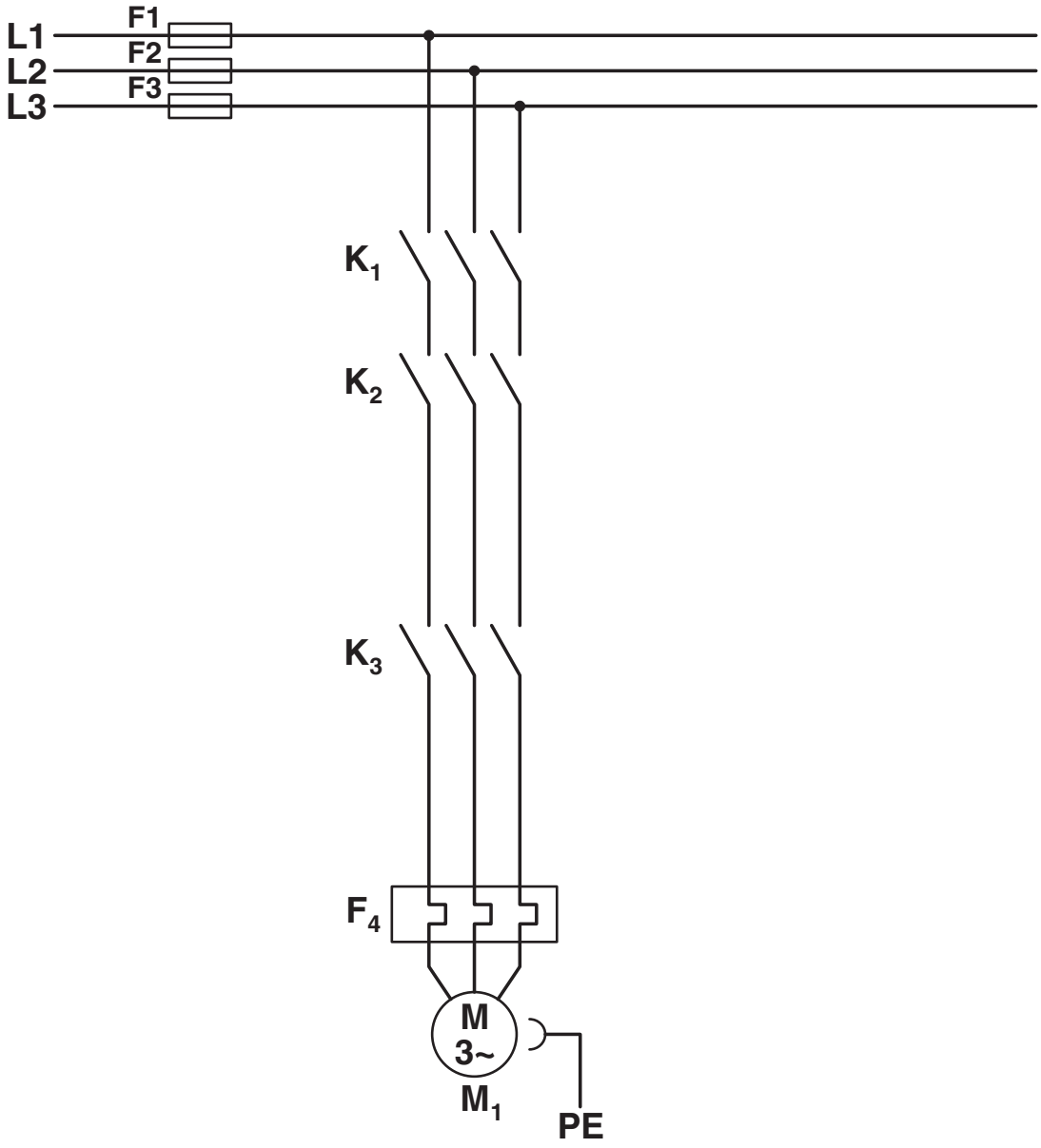

Conventional structure

Main current path for contactor according to category 3

K1 + K2 = Emergency stop contactor
K3 = Right contactor
F4 = Motor protection relay

Circuit diagram

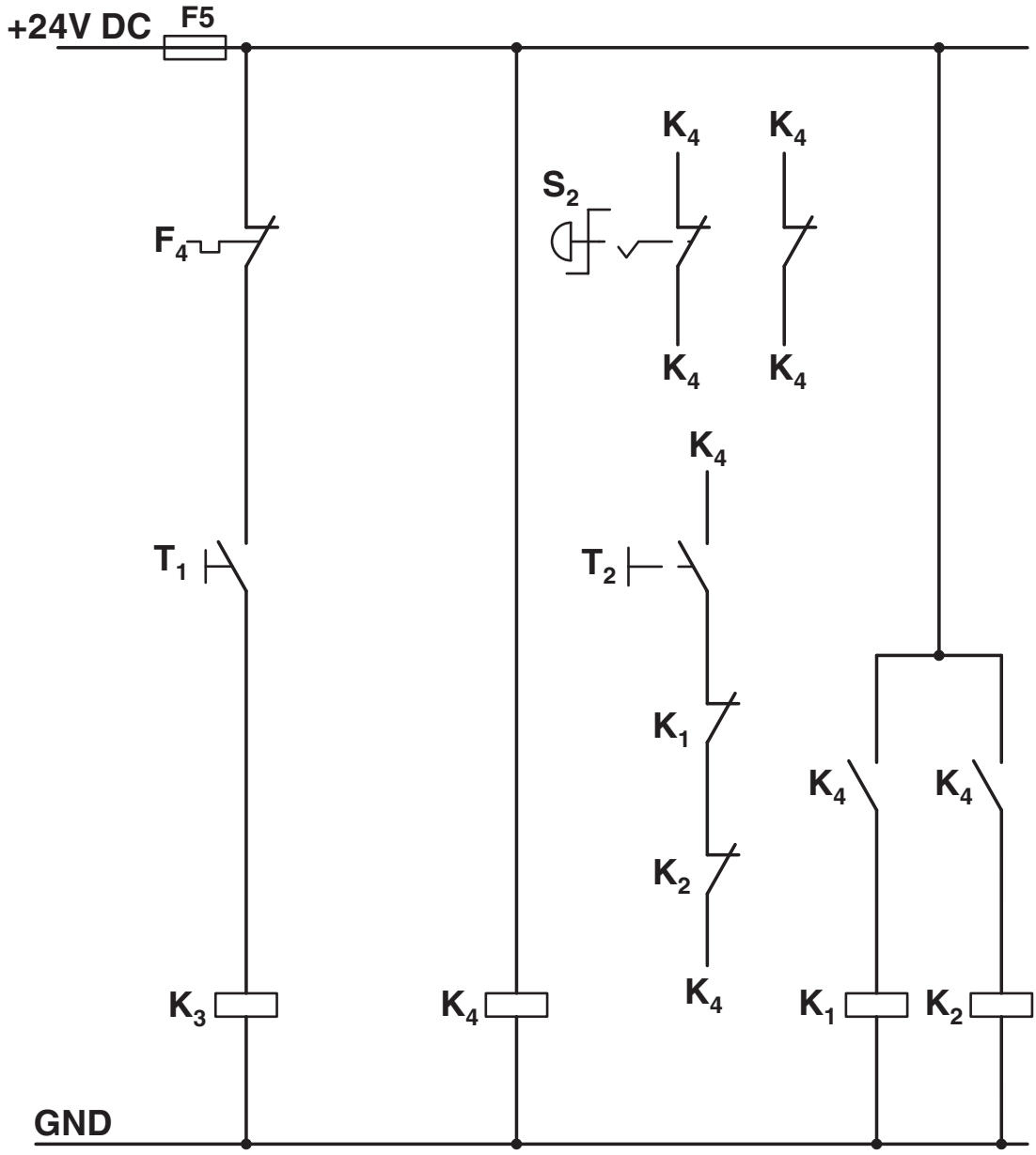

Conventional structure

Control current path for contactor according to category 3

K1 + K2 = Emergency stop contactor
K3 = Right contactor
K4 = PSR SCP-24DC.../safety relay
T1 = Right, T3 = Reset
S2 = Emergency stop
F4 = Motor protection relay

Circuit diagram

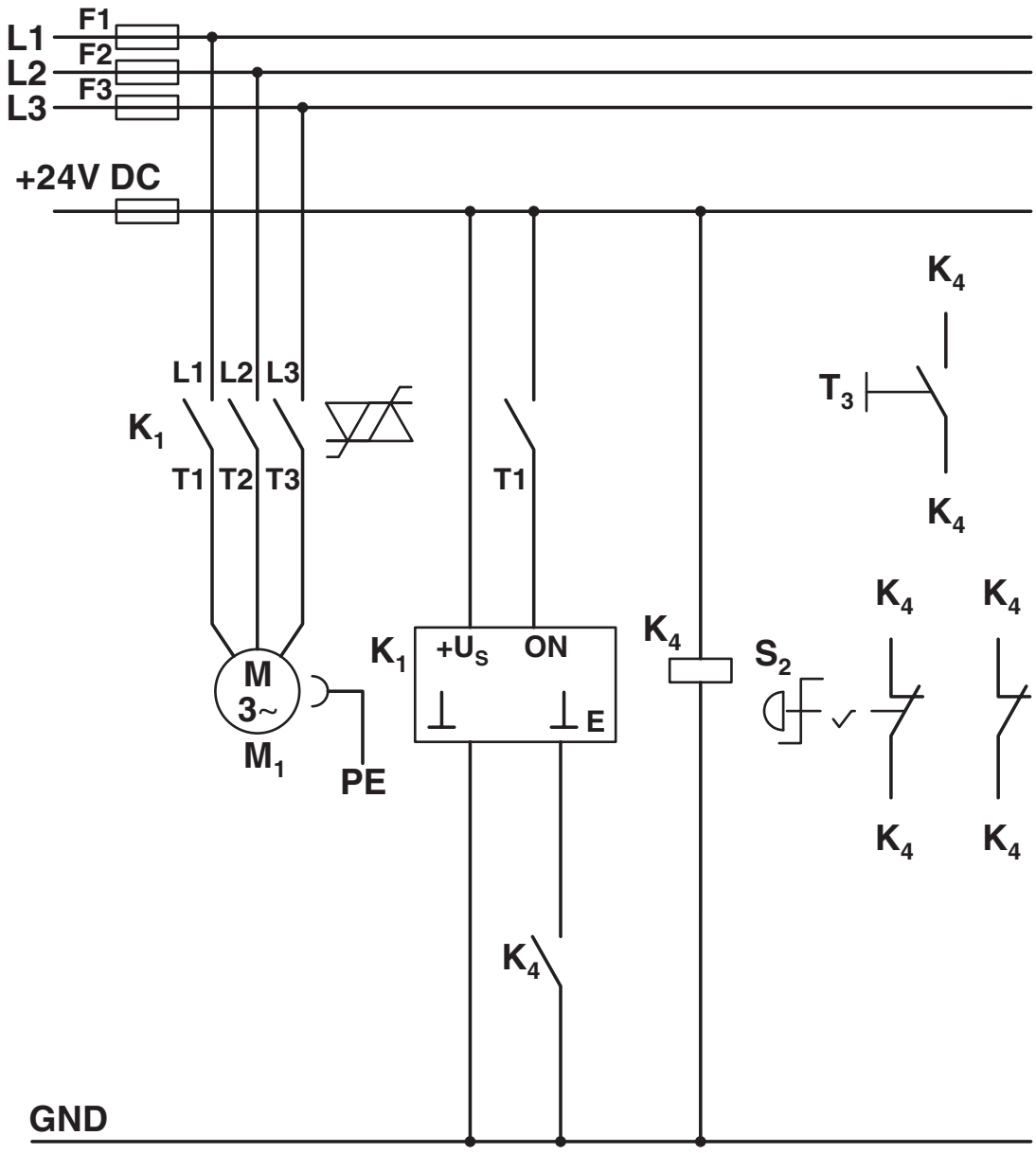

Structure with CONTACTRON

Main and control current path for '3 in 1' hybrid motor starter according to category 3
K1 = '3 in 1' hybrid motor starter
K4 = PSR SCP-24DC.../safety relay
T1 = Right, T3 = Reset
S2 = Emergency stop

Block diagram

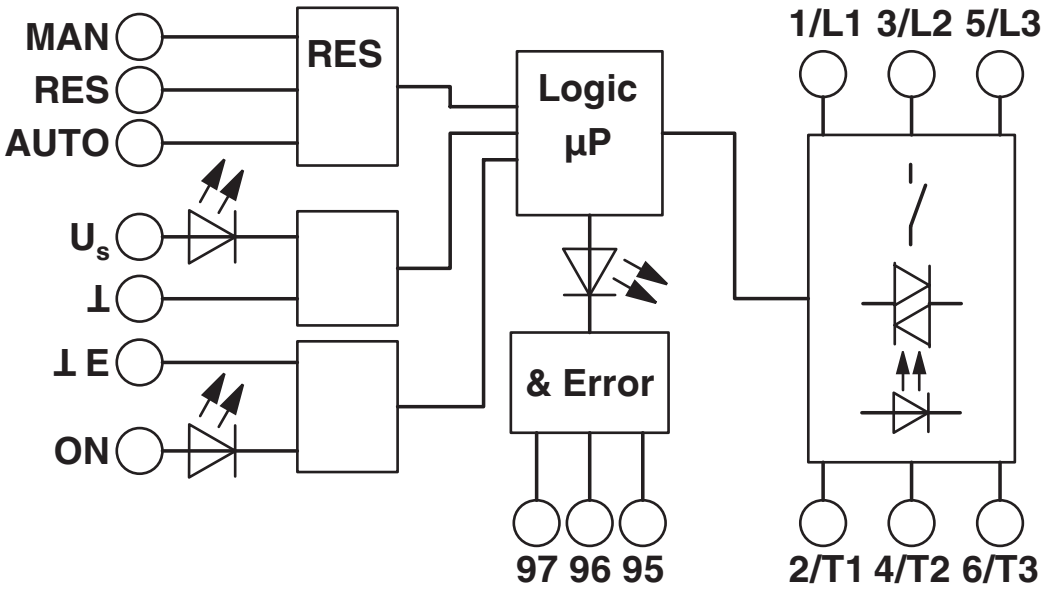

Approvals

To download certificates, visit the product detail page: https://www.phoenixcontact.com/us/products/2903918

IECEE CB Scheme
Approval ID: DE1-55728

UL Listed
Approval ID: FILE E 323771

CCC
Approval ID: 2016010304871315

cUL Listed
Approval ID: FILE E 323771

cUL Listed
Approval ID: E228652

UL Listed
Approval ID: E228652

CCC
Approval ID: 2024010304672817

ATEX
Approval ID: PTB 07 ATEX 3145

Classifications

ECLASS

ECLASS-13.0	27370905
ECLASS-15.0	27370905
ECLASS-15.0 ASSET	27250101

ETIM

ETIM 10.0	EC001037

UNSPSC

UNSPSC 21.0	25173900

Environmental product compliance

EU RoHS

Fulfills EU RoHS substance requirements	Yes
Exemption	7(a), 7(a)-I, 7(c)-I

China RoHS

Environment friendly use period (EFUP)	EFUP-50
	An article-related China RoHS declaration table can be found in the download area for the respective article under "Manufacturer declaration". For all articles with EFUP-E, no China RoHS declaration table issued and required.

EU REACH SVHC

REACH candidate substance (CAS No.)	1-Methyl-2-pyrrolidone (NMP)(CAS: 872-50-4)
	Lead(CAS: 7439-92-1)
SCIP	3701e030-5e8c-47c0-bf72-0ce349c47780

Phoenix Contact 2026 © - all rights reserved
https://www.phoenixcontact.com

Phoenix Contact USA
586 Fulling Mill Road
Middletown, PA 17057, United States
(+717) 944-1300
info@phoenixcon.com