REL-PR3-230AC/3X21 - Single relay

2903705

https://www.phoenixcontact.com/us/products/2903705

Please be informed that the data shown in this PDF document is generated from our online catalog. Please find the complete data in the user documentation. Our general terms of use for downloads are valid.



Plug-in high-power relay with power contacts, 3 changeover contacts, coil voltage: 230 V AC

Commercial data

Item number	2903705
Packing unit	1 pc
Minimum order quantity	1 pc
Sales key	C460
Product key	DK6965
GTIN	4046356759175
Weight per piece (including packing)	84.5 g
Weight per piece (excluding packing)	84.5 g
Customs tariff number	85364900
Country of origin	PL

Technical data

Notes

Notes on operation	The outputs are not suitable for switching different outer conductors.
Notes on operation	Do not use to separate SELV / PELV circuits from other circuits, because safe isolation is not guaranteed.

Product properties

Product type	Single relay
Set comprises	2903276 RIF-4-RPT-LV-230AC/3X21
Operating mode	100% operating factor
Mechanical service life	approx. 10^7 cycles

Insulation characteristics

Insulation	Basic insulation
Overvoltage category	III
Pollution degree	3

Data management status

Date of last data management	01.04.2026

Electrical properties

Service life electrical	see diagram
Maximum power dissipation for nominal condition	2.76 W
Test voltage (Winding/contact)	2.5 kV_{rms} (50 Hz, 1 min., winding/contact)
Test voltage (Changeover contact/changeover contact)	2.5 kV_{rms} (50 Hz, 1 min., changeover contact/changeover contact)
Rated insulation voltage	250 V AC
Rated surge voltage	4 kV

Input data

Coil side

Nominal input voltage U_N	230 V AC
Input voltage range	195.5 V AC ... 253 V AC (20 °C)
Mains frequency	50/60 Hz
Drive and function	monostable
Drive (polarity)	non-polarized
Typical input current at U_N	12 mA
Input power dissipation for U_N	2.8 W
Typical response time	5 ms ... 25 ms (depending on phase relation)
Typical release time range	5 ms ... 20 ms (depending on phase relation)
Coil resistance	7080 Ω ±15 %

Output data

Switching

Contact switching type	3 changeover contacts
Type of switch contact	Single contact
Contact material	AgNi
Maximum switching voltage	440 V AC
	250 V DC
Minimum switching voltage	10 V (At 24 mA)
Limiting continuous current	16 A
Maximum inrush current	50 A (20 ms, N/O contacts)
Min. switching current	10 mA (at 24 V)
Interrupting rating (ohmic load) max.	384 W (at 24 V DC)
	124 W (at 48 V DC)
	108 W (at 60 V DC)
	52 W (at 110 V DC)
	70 W (at 220 V DC)
	4000 VA (for 250 V AC)
	4000 VA (at 440 V AC)
3-phase motor load	1500 W (at 400 V, AC3)
Motor load according to UL 508	1/3 HP, 120 V AC (single-phase AC motor)
	1/2 HP, 240 V AC (single-phase AC motor)
	1/2 HP, 240 V AC (three-phase induction motor)

Connection data

Connection method	Plug-in connection

Dimensions

Item dimensions

Width	38.6 mm
Height	36.1 mm
Depth	45.5 mm

Environmental and real-life conditions

Ambient conditions

Degree of protection	RT I
Degree of protection (Installation location)	≥ IP54 (Installation location)
Ambient temperature (operation)	-40 °C ... 55 °C
Ambient temperature (storage/transport)	-40 °C ... 85 °C
Altitude	≤ 2000 m

Approvals

Corrosive gas test

Identification	ISA-S71.04. G3 Harsh Group

	EN 60068-2-60

Standards and regulations

Standards/regulations	IEC 60664
	IEC 61810

Mounting

Mounting position	any

Drawings

Diagram

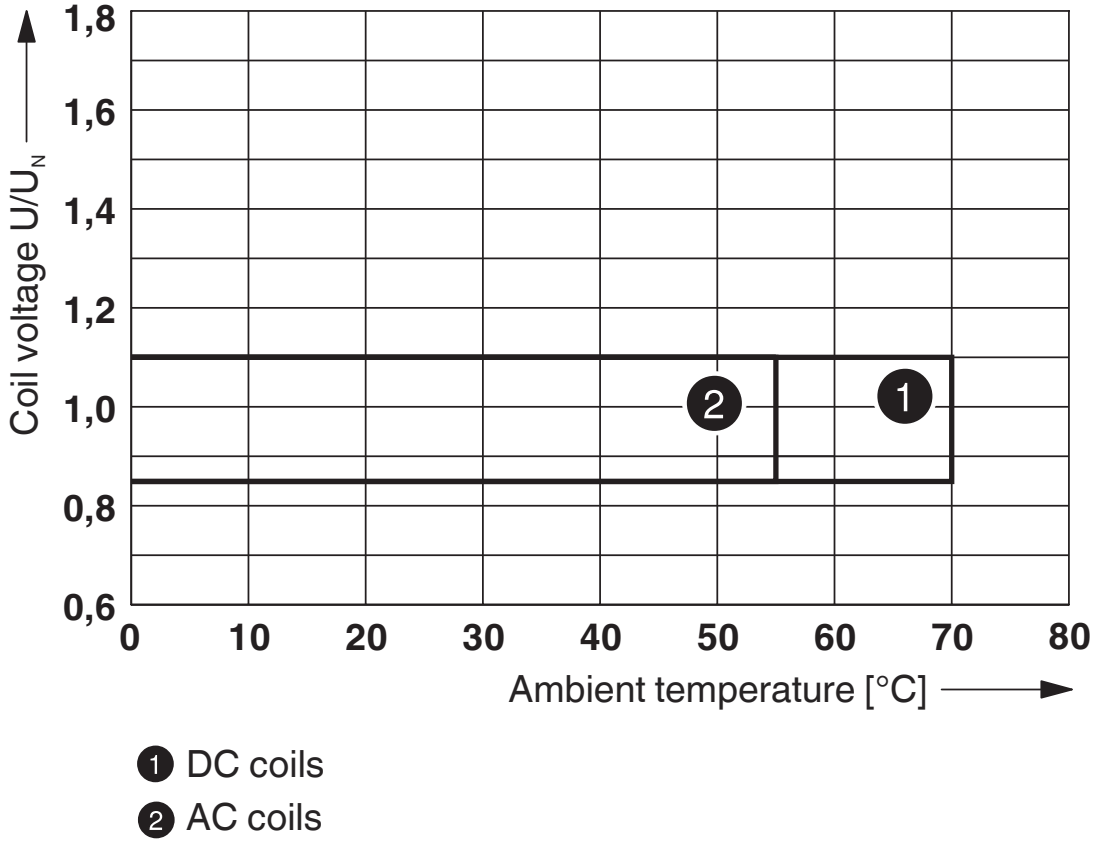

Operating voltage range

Diagram

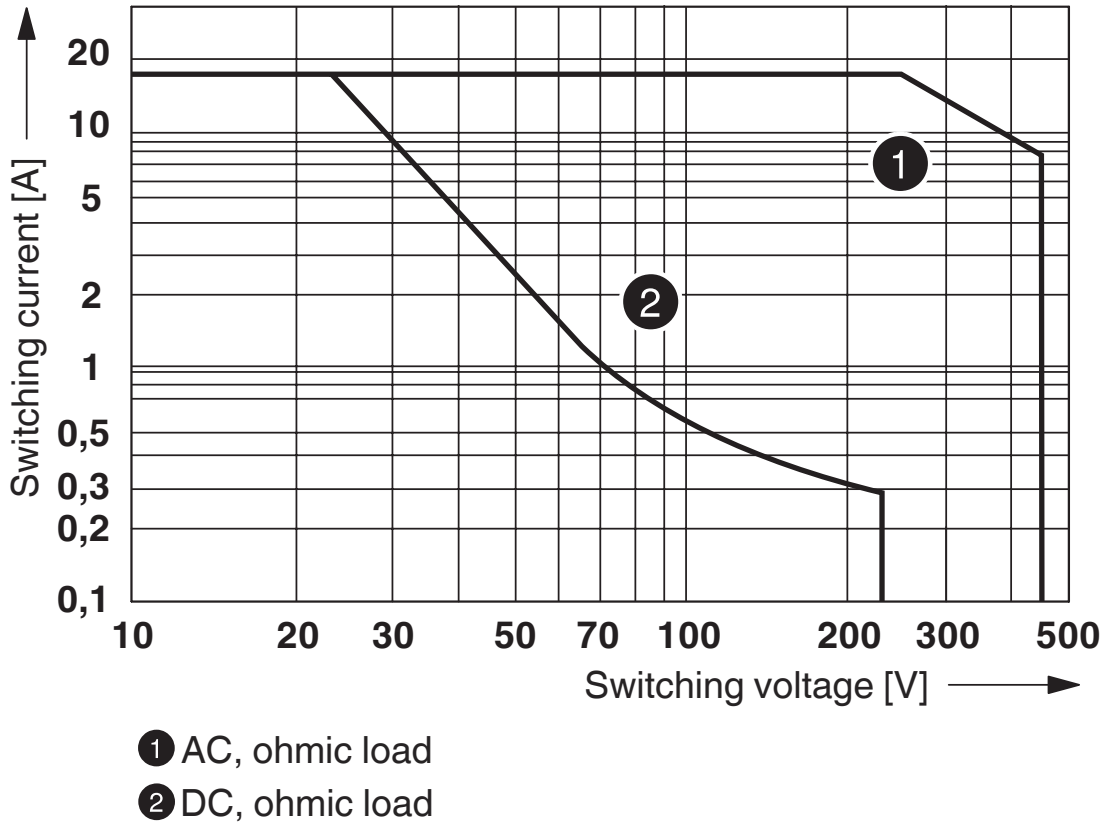

1 AC, ohmic load

2 DC, ohmic load

Interrupting rating

Diagram

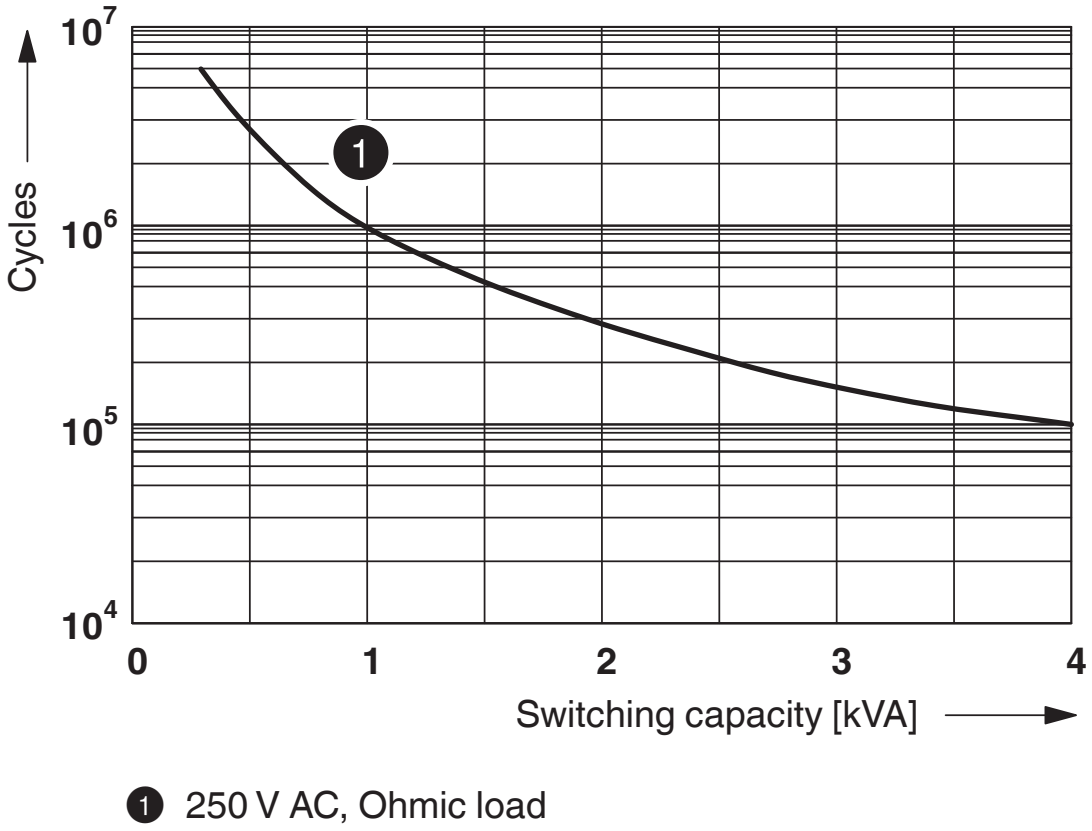

1 250 V AC, Ohmic load

Electrical service life

Diagram

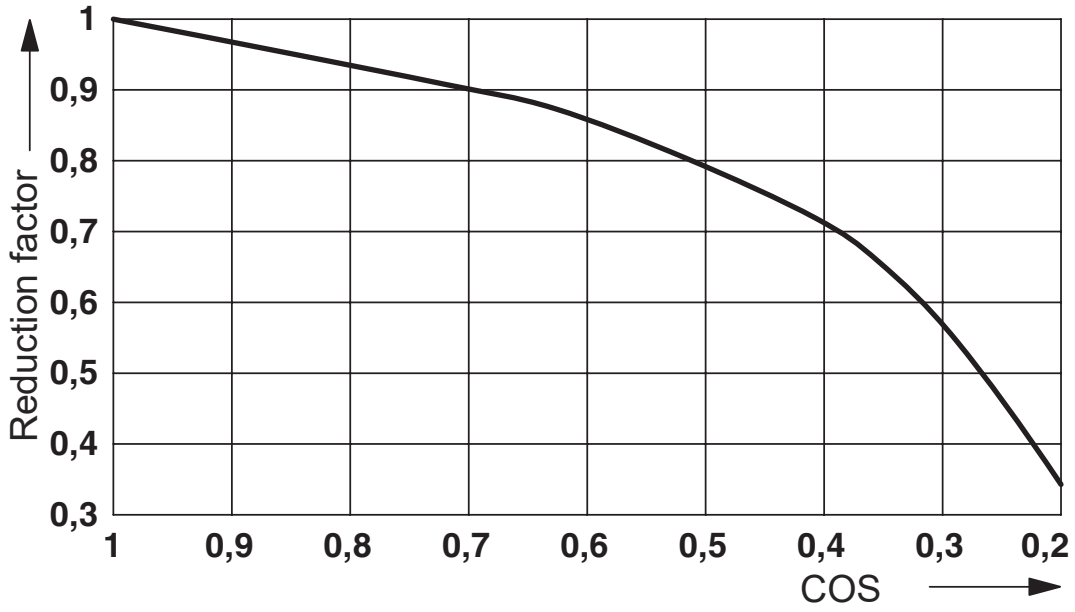

Service life reduction factor

Diagram

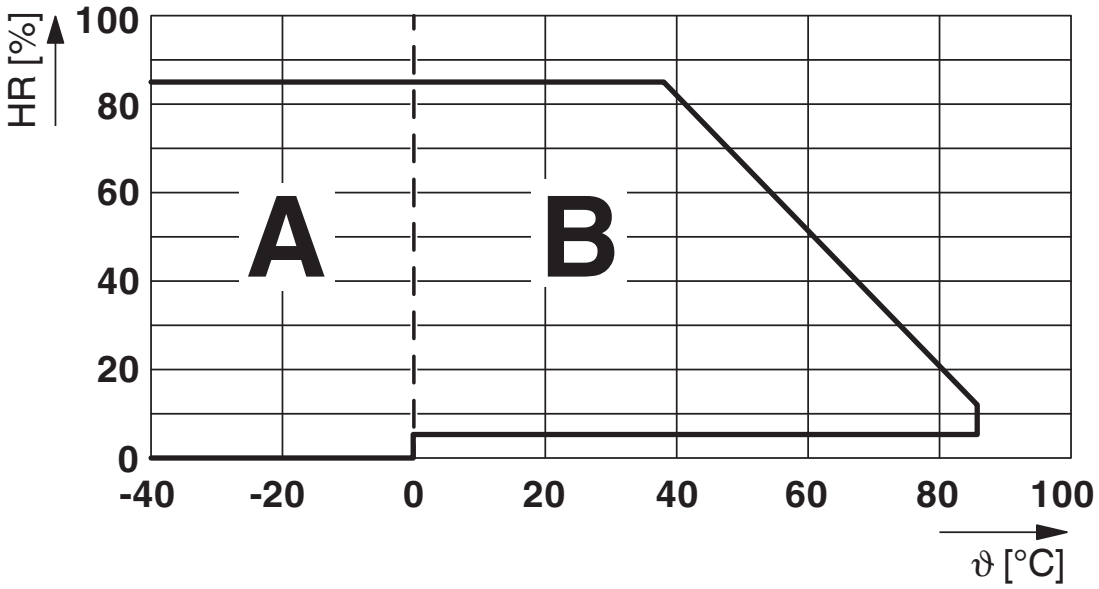

Permissible humidity for operation and storage.
The maximum permissible ambient temperature as specified in the data sheet must be observed.

Area A: Ice buildup at ambient temperatures ≤ 0°C must be prevented
Area B: Condensation at ambient temperatures > 0°C must be prevented

On 30 full days that are naturally distributed across an entire year, a humidity level of 95% is permissible at an ambient temperature ≤ 25°C.

Circuit diagram

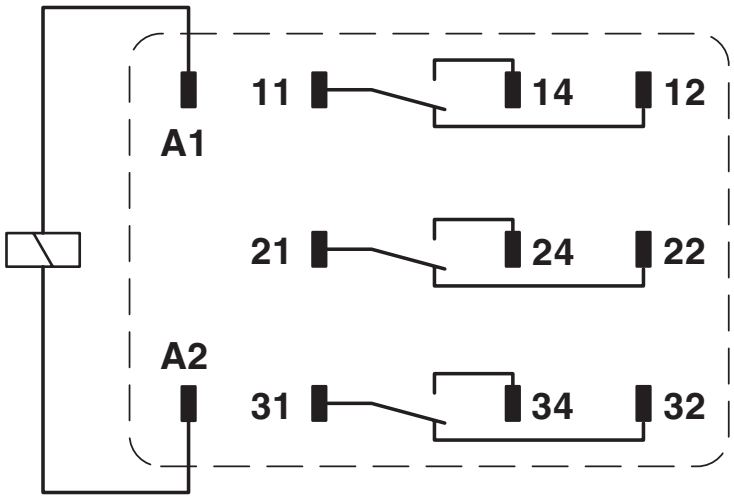

Approvals

To download certificates, visit the product detail page: https://www.phoenixcontact.com/us/products/2903705

CSA
Approval ID: 256725

cULus Recognized
Approval ID: E172140

Classifications

ECLASS

ECLASS-13.0	27371601
ECLASS-15.0	27371601

ETIM

ETIM 10.0	EC001437

UNSPSC

UNSPSC 21.0	39122300

Environmental product compliance

EU RoHS

Fulfills EU RoHS substance requirements	Yes, No exemptions

China RoHS

Environment friendly use period (EFUP)	EFUP-E
	No hazardous substances above the limits

EU REACH SVHC

REACH candidate substance (CAS No.)	No substance above 0.1 wt%

EF3.1 Climate Change

CO2e kg	1.879 kg CO2e

Phoenix Contact 2026 © - all rights reserved
https://www.phoenixcontact.com

Phoenix Contact USA
586 Fulling Mill Road
Middletown, PA 17057, United States
(+717) 944-1300
info@phoenixcon.com