TRIO-PS-2G/1AC/24DC/20 - Power supply

2903151

https://www.phoenixcontact.com/us/products/2903151

Please be informed that the data shown in this PDF document is generated from our online catalog. Please find the complete data in the user documentation. Our general terms of use for downloads are valid.



Primary-switched TRIO POWER power supply with push-in connection for DIN rail mounting, input: single-phase, output: 24 V DC/20 A

Product description

TRIO POWER power supplies with standard functionality
The TRIO POWER power supply range with push-in connection has been perfected for use in machine building. All functions and the space-saving design of the single and three-phase modules are optimally tailored to the stringent requirements. Under challenging ambient conditions, the power supply units, which feature an extremely robust electrical and mechanical design, ensure the reliable supply of all loads.

Your advantages

- Save time and costs, thanks to the Push-in connection and narrow design
- Increase system availability, thanks to dynamic boost with 150 % of the nominal current for 5 seconds
- Maximum flexibility due to the wide temperature range from -25°C to +70°C and device startup at -40°C
- Rugged design

ELEKTROGERÄTE RÜCKNAHME

Commercial data

Item number	2903151
Packing unit	1 pc
Minimum order quantity	1 pc
Sales key	CM12
Product key	CMPO13
GTIN	4046356960939
Weight per piece (including packing)	1,539.1 g
Weight per piece (excluding packing)	1,321.8 g

Customs tariff number	85044095
Country of origin	CN

Technical data

Input data

AC operation

Network type	Star network
Nominal input voltage range	100 V AC ... 240 V AC
Input voltage range	100 V AC ... 240 V AC -15 % ... +10 %
Electric strength, max.	≤ 300 V AC 15 s
Typical national grid voltage	120 V AC
	230 V AC
Voltage type of supply voltage	AC
Inrush current	≤ 20 A (typical)
Inrush current integral (I^2t)	< 0.9 A^2s
Inrush current limitation	typ. 20 A (after 1 ms)
AC frequency range	50 Hz ... 60 Hz ±10 %
Mains buffering time	typ. 10 ms (120 V AC)
	typ. 15 ms (230 V AC)
Current consumption	5.6 A (100 V AC)
	4.3 A (120 V AC)
	2.4 A (230 V AC)
	2.4 A (240 V AC)
Nominal power consumption	534.7 VA
Protective circuit	Transient surge protection; Varistor
Power factor (UMin)	> 0.9 (120 V AC)
Power factor (UMax)	> 0.9 (230 V AC)
Typical response time	< 1 s
Input fuse	10 A (internal (device protection))
Recommended breaker for input protection	10 A ... 16 A (Characteristics B, C, D, K)
Discharge current to PE	< 3.5 mA

DC operation

Nominal input voltage range	110 V DC ... 250 V DC
Input voltage range	110 V DC ... 250 V DC ±10 %
Extended input voltage range in operation	> 99 V DC
Switch-on voltage	≥ 87 V DC
Shut-down voltage	< 77 V DC
Voltage type of supply voltage	DC
Mains buffering time	> 15 ms (230 V AC)
Current consumption	4.9 A (110 V DC)
	2.1 A (250 V DC)

Output data

Efficiency	typ. 91.4 % (120 V AC)

	typ. 92.9 % (230 V AC)
Output characteristic	U/I with dynamic load reserve
Nominal output voltage	24 V DC ±1 %
Setting range of the output voltage (U_{Set})	24 V DC ... 28 V DC (> 24 V DC, constant capacity restricted)
Nominal output current (I_N)	20 A
Dynamic Boost ($I_{Dyn.Boost}$)	30 A (5 s)
Derating	> 60 °C ... 70 °C (2.5 %/K)
Feedback voltage resistance	≤ 35 V DC
Protection against overvoltage at the output (OVP)	≤ 30 V DC
Control deviation	< 1 % (change in load, static 10 % ... 90 %)
	< 3 % (Dynamic load change 10 % ... 90 %, 10 Hz)
	< 0.1 % (change in input voltage ±10 %)
Residual ripple	< 100 mV_{PP} (with nominal values)
Short-circuit-proof	yes
No-load proof	yes
Output power	480 W
	720 W (5 s)
Maximum no-load power dissipation	< 2.9 W (120 V AC)
	< 2.8 W (230 V AC)
Power loss nominal load max.	< 44.8 W (120 V AC)
	< 36.8 W (230 V AC)
Rise time	20 ms (U_{OUT} (10 % ... 90 %))
Connection in parallel	yes, for redundancy and increased capacity
Connection in series	yes

Signal: DC OK

Continuous load current	100 mA

Signal relay 13/14

Default	closed
Digital	30 V AC 30 V DC 100 mA

Connection data

Input

Connection method	Push-in connection
Conductor cross-section, rigid min.	0.2 mm²
Conductor cross-section, rigid max.	4 mm²
Conductor cross-section flexible min.	0.2 mm²
Conductor cross-section flexible max.	2.5 mm²
Single conductor/terminal point, stranded, with ferrule, min.	0.2 mm²
Single conductor/terminal point, stranded, with ferrule, max.	2.5 mm²
Conductor cross-section AWG min.	24
Conductor cross-section AWG max.	12
Stripping length	10 mm

Output

Connection method	Push-in connection
Conductor cross-section, rigid min.	0.2 mm²
Conductor cross-section, rigid max.	10 mm²
Conductor cross-section flexible min.	0.2 mm²
Conductor cross-section flexible max.	6 mm²
Single conductor/terminal point, stranded, with ferrule, min.	0.2 mm²
Single conductor/terminal point, stranded, with ferrule, max.	6 mm²
Conductor cross-section AWG min.	24
Conductor cross-section AWG max.	8
Stripping length	15 mm

Signal

Connection method	Push-in connection
Conductor cross-section, rigid min.	0.2 mm²
Conductor cross-section, rigid max.	1.5 mm²
Conductor cross-section flexible min.	0.2 mm²
Conductor cross-section flexible max.	1.5 mm²
Single conductor/terminal point, stranded, with ferrule, min.	0.2 mm²
Single conductor/terminal point, stranded, with ferrule, max.	1.5 mm²
Conductor cross-section AWG min.	24
Conductor cross-section AWG max.	16
Stripping length	8 mm

Signaling

Types of signaling	LED
	Floating signal contact

Signal output: LED status indicator

Signalization designation	DC OK
Status display	LED
Color	green
DC OK	U_{OUT} > 0.9 x U_N (U_N = 24 V DC)
13/14	U_{OUT} > 0.9 x U_N (U_N = 24 V DC)

Electrical properties

Number of phases	1
Insulation voltage input/output	3 kV AC (type test)
	1.5 kV AC (routine test)

Product properties

Product type	Power supply
Product family	TRIO POWER
MTBF (IEC 61709, SN 29500)	> 1800000 h (25 °C)
	> 1000000 h (40 °C)

	> 480000 h (60 °C)

Insulation characteristics

Protection class	I (in closed control cabinet)
Overvoltage category (EN 62368-1)	II (≤ 2000 m)
Degree of pollution	2

Dimensions

Width	68 mm
Height	130 mm
Depth	160 mm

Installation dimensions

Installation distance right/left	0 mm / 0 mm
Installation distance top/bottom	50 mm / 50 mm

Mounting

Mounting type	DIN rail mounting
Assembly note	alignable: horizontally 0 mm (≤ 40 °C) 10 mm (≤ 70 °C), vertically 50 mm
Mounting position	horizontal DIN rail NS 35, EN 60715
With protective coating	no

Material specifications

Flammability rating according to UL 94 (housing / terminal blocks)	V0
Housing material	Metal
Type of housing	Aluminum (AlMg3)
Hood version	Polycarbonate

Environmental and real-life conditions

Ambient conditions

Degree of protection	IP20
Ambient temperature (operation)	-25 °C ... 70 °C (> 60 °C Derating: 2,5 %/K)
Ambient temperature (storage/transport)	-40 °C ... 85 °C
Ambient temperature (start-up type tested)	-40 °C
Maximum altitude	≤ 4000 m (> 2000 m, Derating: 10 %/1000 m)
Climatic class	3K3 (in acc. with EN 60721)
Max. permissible relative humidity (operation)	≤ 95 % (at 25 °C, non-condensing)
Shock	18 ms, 30g, in each space direction (according to IEC 60068-2-27)
Vibration (operation)	< 15 Hz, amplitude ±2.5 mm (according to IEC 60068-2-6)
	15 Hz ... 150 Hz, 4g, 90 min.

Standards and regulations

Rail applications	EN 50121-4

Standard – Limitation of mains harmonic currents	EN 61000-3-2
Standard - Electrical safety	IEC 62368-1 (SELV)
Standard – Safety extra-low voltage	IEC 62368-1 (SELV) und EN 60204-1 (PELV)
Standard - Safe isolation	DIN VDE 0100-410
Standard - Safety of transformers	EN 61558-2-16 (air clearances and creepage distances only)

Approvals

Shipbuilding approval	DNV GL
UL approvals	UL Listed UL 508
	UL/C-UL Recognized UL 60950-1
	UL ANSI/ISA-12.12.01 Class I, Division 2, Groups A, B, C, D (Hazardous Location)

Conformity/Approvals

SIL in accordance with IEC 61508	0

EMC data

Electromagnetic compatibility	Conformance with EMC Directive 2014/30/EU
Low Voltage Directive	Conformance with Low Voltage Directive 2014/35/EC
EMC requirements for noise emission	EN 61000-6-3
	EN 61000-6-4
EMC requirements for noise immunity	EN 61000-6-1
	EN 61000-6-2

Conducted noise emission

Standards/regulations	EN 55016
	EN 61000-6-3 (Class B)

Noise emission

Standards/regulations	EN 55011 (EN 55022)

Noise emission

Standards/regulations	EN 55016
	EN 61000-6-3 (Class B)

Harmonic currents

Frequency range	Class A, B

Flicker

Frequency range	0 kHz ... 2 kHz

Electrostatic discharge

Standards/regulations	EN 61000-4-2

Electrostatic discharge

Contact discharge	6 kV (Test Level 4)
Discharge in air	8 kV (Test Level 4)
Comments	Criterion A

Electromagnetic HF field

Standards/regulations	EN 61000-4-3

Electromagnetic HF field

Frequency range	80 MHz ... 1 GHz
Test field strength	10 V/m (Test Level 3)
Frequency range	1 GHz ... 2 GHz
Test field strength	10 V/m (Test Level 3)
Frequency range	2 GHz ... 3 GHz
Test field strength	10 V/m (Test Level 3)
Comments	Criterion A

Fast transients (burst)

Standards/regulations	EN 61000-4-4

Fast transients (burst)

Input	4 kV (Test Level 4 - asymmetrical)
Output	2 kV (Test Level 3 - asymmetrical)
Signal	1 kV (Test Level 2 - asymmetrical)
Comments	Criterion A

Surge voltage load (surge)

Standards/regulations	EN 61000-4-5

Surge voltage load (surge)

Input	3 kV (Test Level 3 - symmetrical)
	6 kV (Test Level 4 - asymmetrical)
Output	1 kV (Test Level 2 - symmetrical)
	2 kV (Test Level 1 - asymmetrical)
Signal	1 kV (Test Level 2 - asymmetrical)
Comments	Criterion B

Conducted interference

Standards/regulations	EN 61000-4-6

Conducted interference

Input/Output	asymmetrical
Frequency range	0.15 MHz ... 80 MHz
Comments	Criterion A
Voltage	10 V (Test Level 3)

Emitted interference

Standards/regulations	EN 61000-6-3
Radio interference voltage in acc. with EN 55011	EN 55011 (EN 55022) Class B, area of application: Industry and residential
Emitted radio interference in acc. with EN 55011	EN 55011 (EN 55022) Class B, area of application: Industry and residential

Criteria

Criterion A	Normal operating behavior within the specified limits.
Criterion B	Temporary impairment to operational behavior that is corrected by the device itself.

Drawings

Application drawing

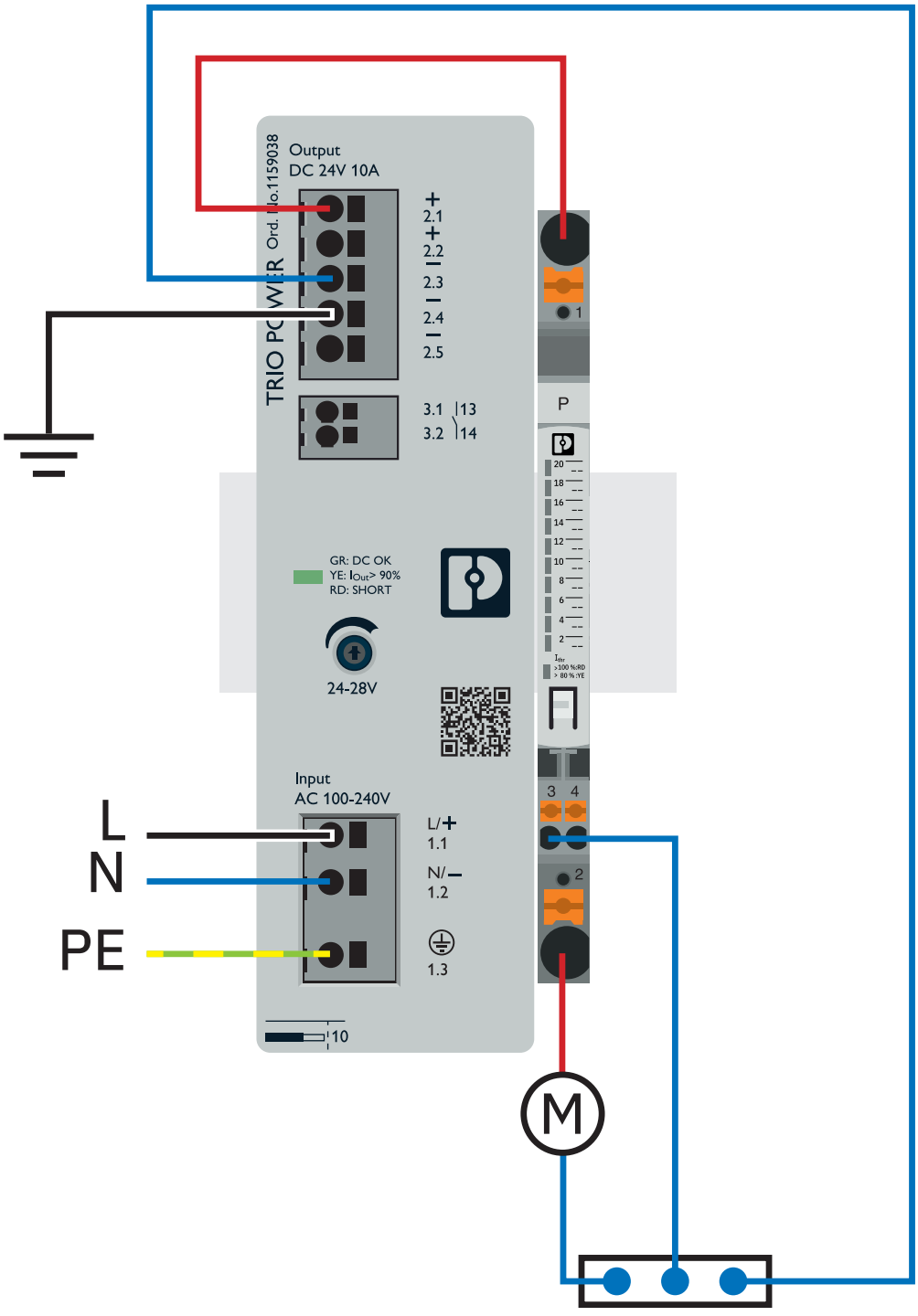

Selective load monitoring with CMU-DC

Application drawing

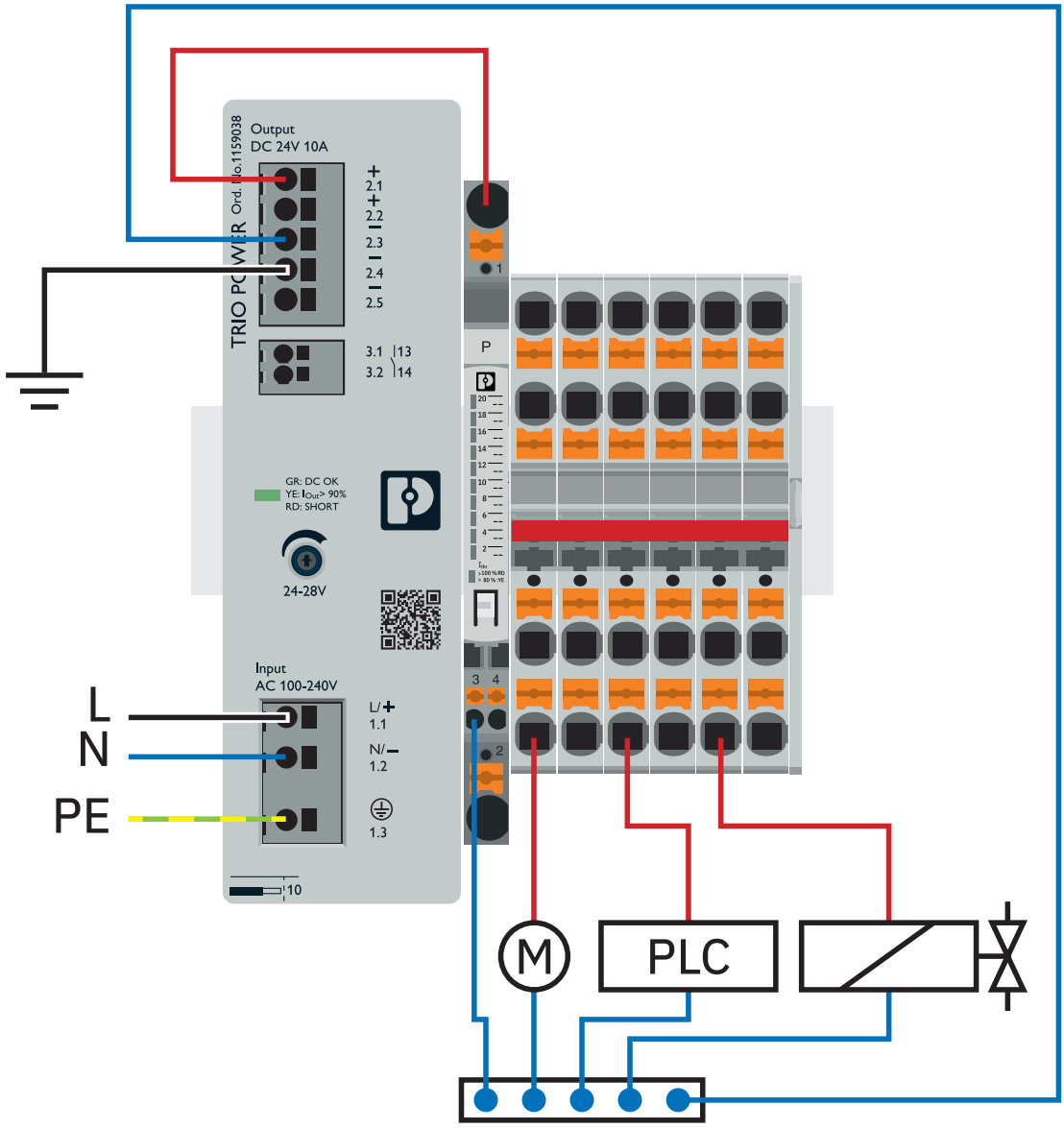

Utilization monitoring with CMU-DC

Block diagram

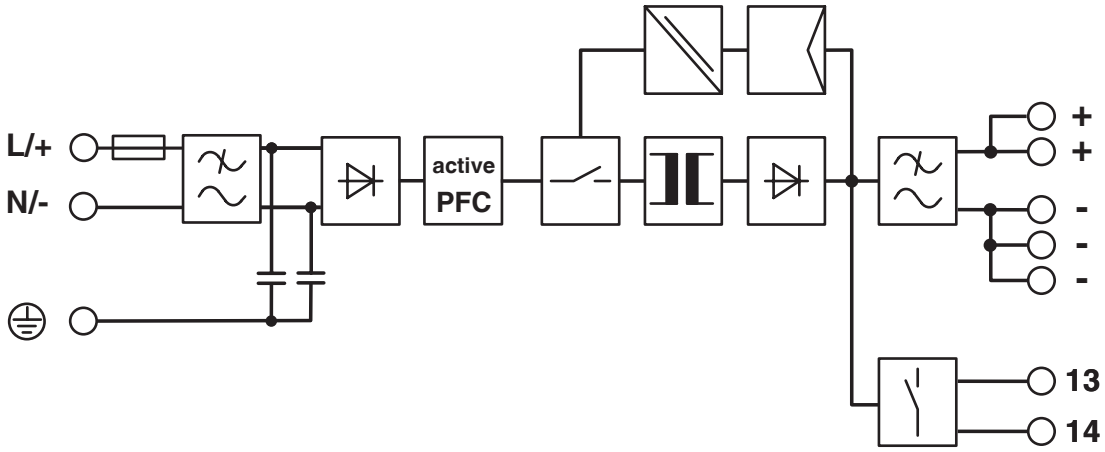

Approvals

To download certificates, visit the product detail page: https://www.phoenixcontact.com/us/products/2903151

cUL Recognized
Approval ID: E211944

UL Recognized
Approval ID: E211944

IECEE CB Scheme
Approval ID: DK-45301-A1-UL

EAC
Approval ID: RU S-DE.BL08.W.00764

EAC
Approval ID: RU S-DE.BL08.W.00764

UL Listed
Approval ID: E123528

cUL Listed
Approval ID: E123528

DNV
Approval ID: TAA00000BM

IECEE CB Scheme
Approval ID: DK-45301-A1-UL

BIS Licence Document
Approval ID: R-41214701

UL Recognized
Approval ID: E211944

cUL Recognized
Approval ID: E211944

cUL Listed
Approval ID: E123528

UL Listed
Approval ID: E123528

EAC
Approval ID: RU S-DE.BL08.W.00764

EAC
Approval ID: KZ7500651 0101 12535

DNV
Approval ID: TAA00000BM

IECEE CB Scheme
Approval ID: DE/PTZ/0036/A1

IECEE CB Scheme
Approval ID: DE/PTZ/0036/A1

BIS Licence Document
Approval ID: R-41214701

EAC
Approval ID: RU S-DE.BL08.W.00764

EAC
Approval ID: KZ7500651 0101 12535

cUL Listed
Approval ID: E199827

UL Listed
Approval ID: E199827

UL Listed
Approval ID: E199827

cUL Listed
Approval ID: E199827

Classifications

ECLASS

ECLASS-13.0	27040701
ECLASS-15.0	27040701

ETIM

ETIM 10.0	EC002540

UNSPSC

UNSPSC 21.0	39121000

Environmental product compliance

EU RoHS

Fulfills EU RoHS substance requirements	Yes
Exemption	7(a), 7(c)-I

China RoHS

Environment friendly use period (EFUP)	EFUP-25
	An article-related China RoHS declaration table can be found in the download area for the respective article under "Manufacturer declaration". For all articles with EFUP-E, no China RoHS declaration table issued and required.

EU REACH SVHC

REACH candidate substance (CAS No.)	Diboron trioxide(CAS: 1303-86-2)
	Lead monoxide (lead oxide)(CAS: 1317-36-8)
	Lead(CAS: 7439-92-1)
SCIP	02d6fdba-a12f-4e6b-9800-f398bba1e238

EF3.1 Climate Change

CO2e kg	37.31 kg CO2e

Phoenix Contact 2026 © - all rights reserved
https://www.phoenixcontact.com

Phoenix Contact USA
586 Fulling Mill Road
Middletown, PA 17057, United States
(+717) 944-1300
info@phoenixcon.com