FL MC EF 1300 SM SC - FO converters

2902856

https://www.phoenixcontact.com/us/products/2902856

Please be informed that the data shown in this PDF document is generated from our online catalog. Please find the complete data in the user documentation. Our general terms of use for downloads are valid.

CRA-READY



FO converter with SC duplex FO connection (1300 nm), for converting 10/100Base-T(X) to singlemode fiberglass (9/125 µm). Auto negotiation and auto MDI(X) function. Comprehensive link diagnostics. DIN-rail mountable, 18 V DC ... 30 V DC supply. Product is being prepared for compliance with the Cyber Resilience Act (CRA).

Product description

Optical transmission with FO technology provides superior immunity to interference at maximum transmission ranges without restricting the transmission bandwidth.

Your advantages

- Transmission ranges up to 36 km
- Auto negotiation
- Auto MDI/MDI-X switch-over
- Link fault pass through (LFPT) and far end fault (FEF) functions for easy connection monitoring
- 10/100 Mbps
- Shipbuilding approval in accordance with DNV GL

ELEKTROGERÄTE RÜCKNAHME

Commercial data

Item number	2902856

Packing unit	1 pc
Minimum order quantity	1 pc
Sales key	DN06
Product key	DNC311
GTIN	4046356689212
Weight per piece (including packing)	168.9 g
Weight per piece (excluding packing)	115 g
Customs tariff number	85176200
Country of origin	US

Technical data

Notes

Note on application

Note on application	As things stand now, we are preparing the product so that, as of December 11, 2027, it will comply with the requirements of the EU Cyber Resilience Act (CRA) based on the information currently available regarding the CRA.

Utilization restriction

CCCex note	Use in potentially explosive areas is not permitted in China.

Product properties

Product type	Media converter
MTTF	1400 Years (SN 29500 standard, temperature 25°C, operating cycle 21%)
	599 Years (SN 29500 standard, temperature 40°C, operating cycle 34.25%)
	101 Years (SN 29500 standard, temperature 40°C, operating cycle 100%)
MTBF	284 Years (Telcordia standard, 25°C temperature, 21% operating cycle (5 days a week, 8 hours a day))
	74 Years (Telcordia standard, 40°C temperature, 34.25% operating cycle (5 days a week, 12 hours a day))
Signal delay	± 1.3 µs (Store and Forward mode, 10/100 Mbps, depending on the frame size)

Functions

Basic functions	Store-and-forward media converter

Security functions

Basic functions	Store-and-forward media converter

System properties

Functionality

Basic functions	Store-and-forward media converter

Electrical properties

Electrical isolation	according to IEEE 802.3
	VCC // FE // Ethernet
Maximum power dissipation for nominal condition	2.4 W
Test voltage data interface/power supply	0.5 kV_{rms} (50 Hz, 1 min.)

Supply

Supply voltage range	18 V DC ... 30 V DC (Screw connection)
	18 V DC ... 30 V DC (as an alternative or redundant, via backplane bus contact and system current supply)

Nominal supply voltage	24 V DC
Typical current consumption	100 mA (24 V DC)
Protective circuit	Reverse polarity protection

Connection data

Supply

Connection method	Plug-in screw terminal block (COMBICON), redundancy possible
Single conductor/terminal point, rigid	0.2 mm² ... 2.5 mm²
Single-wire/terminal point, flexible	0.2 mm² ... 2.5 mm²
Conductor cross-section, flexible [AWG]	24 ... 14
Stripping length	7.00 mm
Tightening torque	0.56 Nm ... 0.79 Nm

Interfaces

Signal	Ethernet
Basic functions	Store-and-forward media converter

Data: optical FO

Transmit capacity, minimum	≥ -15 dBm ((9/125 µm) dynamic in link mode (average))
Transmit capacity, maximum	≤ -8 dBm ((9/125 µm) dynamic in link mode (average))
Transmission length incl. 3 dB system reserve	36 km (F-E 9/125 0.36 dB/km)
	32 km (F-E 9/125 0.4 dB/km)
	26 km (F-E 9/125 0.5 dB/km)
Connection method	SC duplex
Wavelength	1300 nm
Minimum receiver sensitivity	-31 dBm (dynamic in link mode (average))
Maximum receiver sensitivity	-7 dBm (dynamic in link mode (average))
Transmission medium	Single-mode fiberglass

Data: Ethernet interface, 10/100Base-T(X) in accordance with IEEE 802.3

Transmission speed	10/100 Mbps
Connection method	RJ45 jack, shielded
No. of channels	1
Transmission length	100 m (shielded twisted pair)
Transmission medium	Copper
Signal LEDs	Activity, link status, 10/100 Mbps
Auto-negotiation modes	Auto
Link through	Link fault pass through
MDI-/MDI-X switchover	Auto-MDI(X)

Dimensions

Dimensional drawing	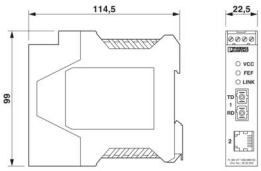
Width	22.5 mm
Height	99 mm
Depth	114.5 mm

Material specifications

Color (Housing)	green (RAL 6021)
Material (Housing)	PA 6.6-FR

Cable/line

FO cable

Fiber types	50/125 µm
	62.5/125 µm
	Fiberglass

Mechanical tests

Free fall in accordance with IEC 60068-2-32	Free fall: 1 m
Vibration resistance in accordance with EN 60068-2-6/IEC 60068-2-6	Operation: 5g, 10...150 Hz, 2.5 h, in XYZ direction
Shock in accordance with EN 60068-2-27/IEC 60068-2-27	Operation: 25g, 11 ms period, half-sine shock pulse

Environmental and real-life conditions

Ambient conditions

Degree of protection	IP20
Ambient temperature (operation)	-40 °C ... 65 °C
Ambient temperature (storage/transport)	-40 °C ... 85 °C
Altitude	≤ 5000 m (For restrictions, see the manufacturer's declaration for altitude operation)
	≤ 2000 m (in acc. with UL)
Permissible humidity (operation)	5 % ... 95 % (non-condensing)
Permissible humidity (storage/transport)	5 % ... 95 % (non-condensing)

Approvals

CE

Certificate	CE-compliant

ATEX

Identification	Ⓔx II 3 G Ex ec IIC T4 Gc
Certificate	PxCIF11ATEX2902658X

Note	Please follow the special installation instructions in the documentation!

UL, USA/Canada

Identification	508 Listed
	Class I, Zone 2, AEx nA IIC T4
	Class I, Zone 2, Ex nA IIC T4 Gc X
	Class I, Div. 2, Groups A, B, C, D

Corrosive gas test

Identification	ISA-S71.04-1985 G3 Harsh Group A

Shipbuilding

Identification	DNV GL

Shipbuilding data

Temperature	B
Humidity	A
Vibration	A
EMC	B
Enclosure	Required protection according to the Rules shall be provided upon installation on board

EMC data

Electromagnetic compatibility	Conformance with EMC Directive 2014/30/EU

Electrostatic discharge

Standards/regulations	EN 61000-4-2

Electrostatic discharge

Contact discharge	± 6 kV (Test Level 3)
Discharge in air	± 8 kV (Test Level 3)
Indirect discharge	± 6 kV
Comments	Criterion B

Electromagnetic HF field

Standards/regulations	EN 61000-4-3

Electromagnetic HF field

Frequency range	80 MHz ... 3 GHz (Test Level 3)
Field intensity	10 V/m
Comments	Criterion A

Fast transients (burst)

Standards/regulations	EN 61000-4-4

Fast transients (burst)

Input	± 2 kV (Test Level 3)
Signal	± 2 kV (Test Level 3)

Comments	Criterion B

Surge current load (surge)

Standards/regulations	EN 61000-4-5

Surge current load (surge)

Input	± 0.5 kV (DC supply)
Signal	± 1 kV (Data line, asymmetrical)
Comments	Criterion B

Conducted interference

Standards/regulations	EN 61000-4-6

Conducted interference

Frequency range	0.15 MHz ... 80 MHz
Comments	Criterion A
Voltage	10 V

Emitted interference

Standards/regulations	EN 55032
Comments	Class A, industrial applications

Criteria

Criterion A	Normal operating behavior within the specified limits.
Criterion B	Temporary impairment to operational behavior that is corrected by the device itself.

Standards and regulations

Free from substances that could impair the application of coating	VDMA 24364:2018-05
Electrical isolation	according to IEEE 802.3

Mounting

Mounting type	DIN rail mounting

Drawings

Dimensional drawing

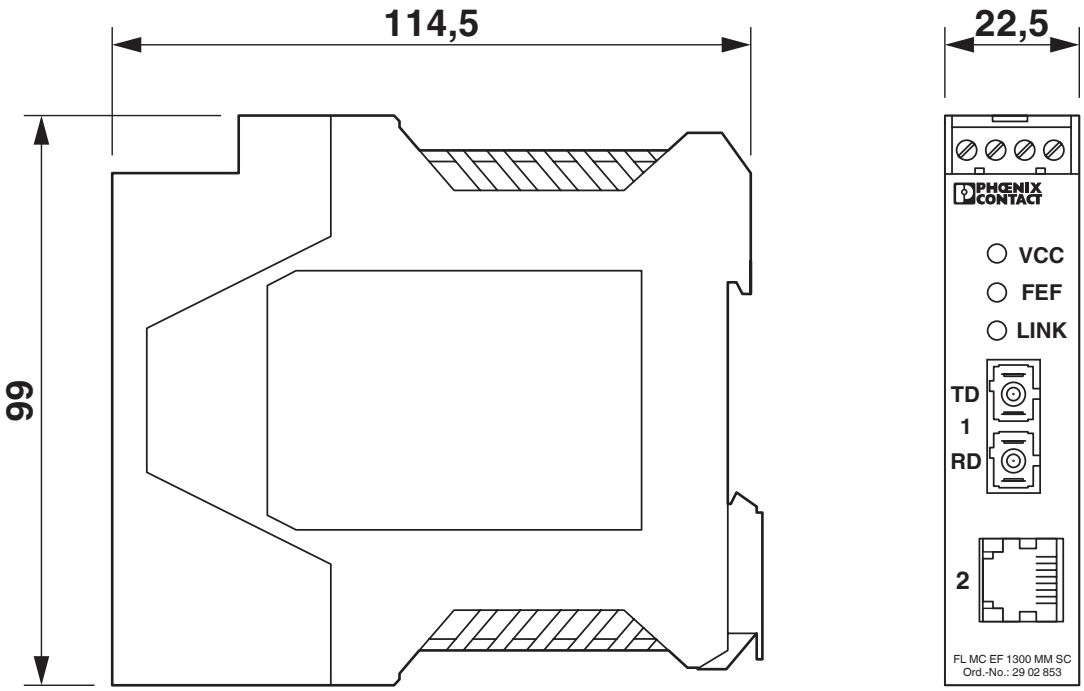

Slim design

Schematic diagram

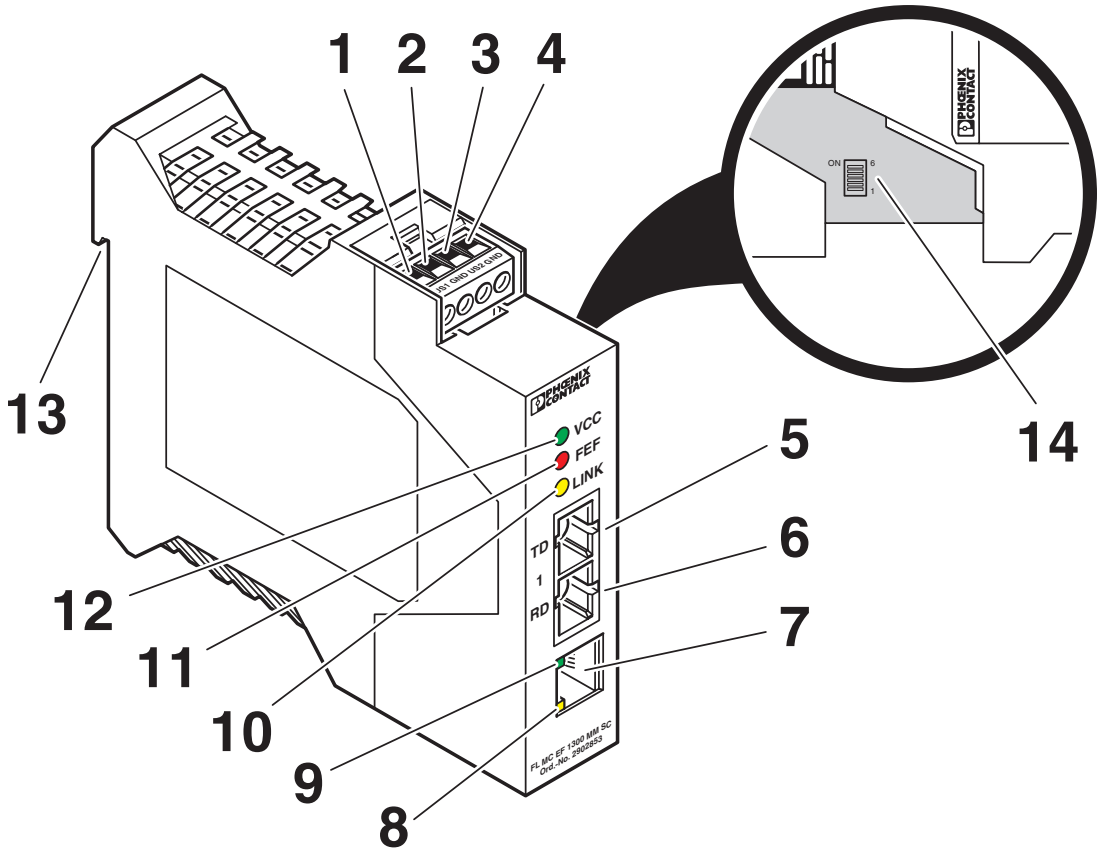

Function elements

Schematic diagram

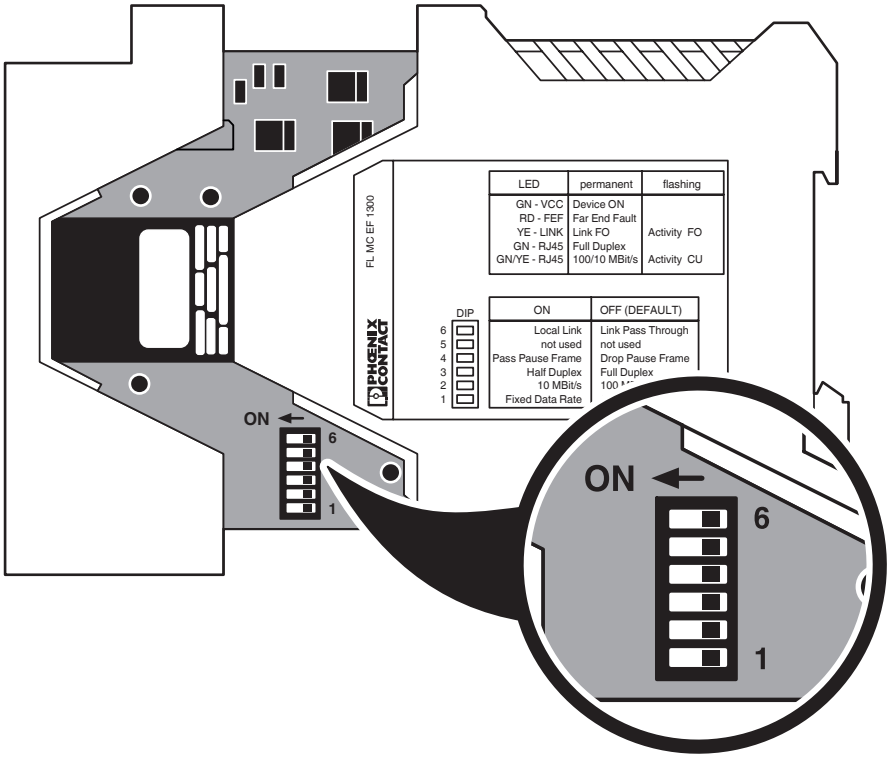

DIP switches

Block diagram

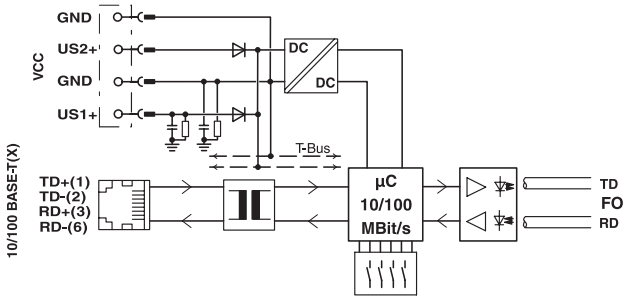

Basic circuit diagram

Approvals

To download certificates, visit the product detail page: https://www.phoenixcontact.com/us/products/2902856

UL Listed
Approval ID: E238705

cUL Listed
Approval ID: E238705

DNV GL
Approval ID: TAA00001KR_7

cUL Listed
Approval ID: E199827

UL Listed
Approval ID: E199827

Classifications

ECLASS

ECLASS-13.0	19170411
ECLASS-15.0	19170411

ETIM

ETIM 10.0	EC001467

UNSPSC

UNSPSC 21.0	43201500

Environmental product compliance

EU RoHS

Fulfills EU RoHS substance requirements	Yes
Exemption	7(a), 7(c)-I

China RoHS

Environment friendly use period (EFUP)	EFUP-50
	An article-related China RoHS declaration table can be found in the download area for the respective article under "Manufacturer declaration". For all articles with EFUP-E, no China RoHS declaration table issued and required.

EU REACH SVHC

REACH candidate substance (CAS No.)	1-Methyl-2-pyrrolidone (NMP)(CAS: 872-50-4)
	Lead(CAS: 7439-92-1)
	6,6'-di-tert-butyl-2,2'-methylenedi-p-cresol(CAS: 119-47-1)
SCIP	440a3d4c-ab01-466b-9d3b-4e4f7baac025

Phoenix Contact 2026 © - all rights reserved
https://www.phoenixcontact.com

Phoenix Contact USA
586 Fulling Mill Road
Middletown, PA 17057, United States
(+717) 944-1300
info@phoenixcon.com