MINI MCR-SL-UI-I-LP-NC - Signal conditioner

2902829

https://www.phoenixcontact.com/us/products/2902829

Please be informed that the data shown in this PDF document is generated from our online catalog. Please find the complete data in the user documentation. Our general terms of use for downloads are valid.

CRA-READY



2-way loop-powered isolating amplifier (supplied on the output side), can be configured via DIP switches, with screw connection technology and standard configuration.

Product description

The 6.2 mm wide MINI MCR-SL-UI-I-LP... configurable 2-way isolating amplifier is used to electrically isolate, condition, and filter analog signals. The output loops that supply the loop-powered isolating amplifier enable the isolating amplifier to operate on an active analog input module. The modules are supplied via the current loop of the controller.
On the input side, standard analog signals and non-standard analog signals can be connected, starting from 2 mA or 50 mV up to 40 mA or 30 V. These are converted to a 4...20 mA signal.
The DIP switches accessible on the housing side enable the configuration of input signal ranges.

Commercial data

Item number	2902829
Packing unit	1 pc
Minimum order quantity	1 pc
Sales key	C403
Product key	DK1131
GTIN	4046356682350
Weight per piece (including packing)	61.5 g
Weight per piece (excluding packing)	52.3 g
Customs tariff number	85437090
Country of origin	DE

Technical data

Notes

Note on application

Note on application	As things stand now, we are preparing the product so that, as of December 11, 2027, it will comply with the requirements of the EU Cyber Resilience Act (CRA) based on the information currently available regarding the CRA.

Utilization restriction

EMC note	EMC: class A product, see manufacturer's declaration in the download area

Product properties

Product type	Signal conditioner
Product family	MINI Analog
No. of channels	1
Configuration	DIP switches

Electrical properties

Alignment span	± 2 %
Alignment zero	± 2 %
Electrical isolation	2-way isolation
Electrical isolation between input and output	yes
Limit frequency (3 dB)	approx. 30 Hz
Maximum power dissipation for nominal condition	19 mW
Step response (10-90%)	approx. 16 ms
Maximum temperature coefficient	0.01 %/K
Temperature coefficient, typical	0.005 %/K
Maximum transmission error	< 0.1 % (of final value)
	< 0.2 % (Without adjustment)

Electrical isolation

Overvoltage category	II
Pollution degree	2

Electrical isolation Input/output IEC/EN 61010

Standards/regulations	IEC/EN 61010
Rated insulation voltage	50 V AC/DC
Test voltage	1.5 kV AC (50 Hz, 60 s)
Insulation	Basic insulation

Supply

Supply voltage range	loop-powered, no external supply necessary
Power consumption	28 mW (without signal)

Input data

Signal: Voltage/current

Number of inputs	1
Voltage input signal	0 mV ... 1000 mV
	0 mV ... 750 mV
	0 mV ... 500 mV
	0 mV ... 300 mV
	0 mV ... 250 mV
	0 mV ... 200 mV
	0 mV ... 150 mV
	0 mV ... 125 mV
	0 mV ... 120 mV
	0 mV ... 100 mV
	0 mV ... 75 mV
	0 mV ... 60 mV
	0 mV ... 50 mV
	0 V ... 10 V
	0 V ... 7.5 V
	0 V ... 5 V
	0 V ... 3 V
	0 V ... 2.5 V
	0 V ... 2 V
	0 V ... 1.5 V
	0 V ... 1.25 V
	0 V ... 1.2 V
	0 V ... 30 V
	0 V ... 25 V
	0 V ... 20 V
	0 V ... 12.5 V
	0 V ... 12 V
	0 V ... 15 V
	-1000 mV ... 1000 mV
	-750 mV ... 750 mV
	-500 mV ... 500 mV
	-300 mV ... 300 mV
	-250 mV ... 250 mV
	-200 mV ... 200 mV
	-125 mV ... 125 mV
	-120 mV ... 120 mV
	-150 mV ... 150 mV
	-100 mV ... 100 mV
	-75 mV ... 75 mV

	-60 mV ... 60 mV
	-50 mV ... 50 mV
	-10 V ... 10 V
	-7.5 V ... 7.5 V
	-5 V ... 5 V
	-3 V ... 3 V
	-2.5 V ... 2.5 V
	-2 V ... 2 V
	-1.25 V ... 1.25 V
	-1.2 V ... 1.2 V
	-1.5 V ... 1.5 V
	-30 V ... 30 V
	-25 V ... 25 V
	-20 V ... 20 V
	-12.5 V ... 12.5 V
	-12 V ... 12 V
	-15 V ... 15 V
	200 mV ... 1000 mV
	150 mV ... 750 mV
	100 mV ... 500 mV
	60 mV ... 300 mV
	50 mV ... 250 mV
	40 mV ... 200 mV
	25 mV ... 125 mV
	24 mV ... 120 mV
	30 mV ... 150 mV
	20 mV ... 100 mV
	15 mV ... 75 mV
	12 mV ... 60 mV
	10 mV ... 50 mV
	2 V ... 10 V (additional areas can be configured, see table)
	1.5 V ... 7.5 V
	1 V ... 5 V
	0.6 V ... 3 V
	0.5 V ... 2.5 V
	0.4 V ... 2 V
	0.25 V ... 1.25 V
	0.24 V ... 1.2 V
	0.3 V ... 1.5 V
	6 V ... 30 V
	5 V ... 25 V
	4 V ... 20 V
	2.5 V ... 12.5 V
	2.4 V ... 12 V

	3 V ... 15 V
Max. voltage input signal	< 40 V
Current input signal	0 mA ... 40 mA
	0 mA ... 30 mA
	0 mA ... 20 mA
	0 mA ... 12 mA
	0 mA ... 10 mA
	0 mA ... 8 mA
	0 mA ... 7.5 mA
	0 mA ... 5 mA
	0 mA ... 6 mA
	0 mA ... 4 mA
	0 mA ... 3 mA
	0 mA ... 2.5 mA
	0 mA ... 2 mA
	-40 mA ... 40 mA
	-30 mA ... 30 mA
	-20 mA ... 20 mA
	-12 mA ... 12 mA
	-10 mA ... 10 mA
	-8 mA ... 8 mA
	-7.5 mA ... 7.5 mA
	-5 mA ... 5 mA
	-6 mA ... 6 mA
	-4 mA ... 4 mA
	-3 mA ... 3 mA
	-2.5 mA ... 2.5 mA
	-2 mA ... 2 mA
	8 mA ... 40 mA
	6 mA ... 30 mA
	4 mA ... 20 mA
	2.4 mA ... 12 mA
	2 mA ... 10 mA
	1.6 mA ... 8 mA
	1.5 mA ... 7.5 mA
	1 mA ... 5 mA
	1.2 mA ... 6 mA
	0.8 mA ... 4 mA
	0.6 mA ... 3 mA
	0.5 mA ... 2.5 mA
	0.4 mA ... 2 mA
Max. current input signal	< 50 mA (Dielectric strength up to 30 V)
Input resistance of voltage input	100 kΩ (≤ 1 V)
	1 MΩ (≥ 1 V)

Input resistance current input	≤ 50 Ω

Output data

Signal: Current

Number of outputs	1
Configurable/programmable	Yes, preconfigured
Current output signal	4 mA ... 20 mA
Max. current output signal	35 mA (output limit)
Load/output load current output	< 1000 Ω ($(U_B$ - 8 V) / 22 mA)
Ripple	< 20 mV_{PP} (at 500 Ω)

Connection data

Connection method	Screw connection
Stripping length	12 mm
Screw thread	M3
Conductor cross-section rigid	0.2 mm² ... 2.5 mm²
Conductor cross-section flexible	0.2 mm² ... 2.5 mm²
Conductor cross-section AWG	26 ... 12

Dimensions

Dimensional drawing	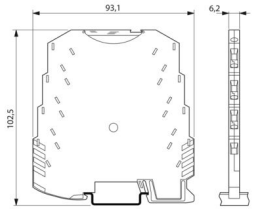
Width	6.2 mm
Height	93.1 mm
Depth	101.2 mm

Material specifications

Color	green (RAL 6021)
Housing material	PBT
Fire protection for rail vehicles (DIN EN 45545-2) R22	HL 1 - HL 2
Fire protection for rail vehicles (DIN EN 45545-2) R23	HL 1 - HL 2
Fire protection for rail vehicles (DIN EN 45545-2) R24	HL 1 - HL 2

Environmental and real-life conditions

Ambient conditions

Degree of protection	IP20
Ambient temperature (operation)	-25 °C ... 70 °C
Ambient temperature (storage/transport)	-40 °C ... 85 °C
Altitude	≤ 2000 m

Permissible humidity (operation)	5 % ... 95 % (non-condensing)

Approvals

CE

Certificate	CE-compliant

UL, USA/Canada

Identification	UL 508 Listed
	Class I, Div. 2, Groups A, B, C, D T5
	Class I, Zone 2, Group IIC

EMC data

Electromagnetic compatibility	Conformance with EMC directive
Noise immunity	EN 61000-6-2
Note	When being exposed to interference, there may be minimal deviations.

Noise emission

Standards/regulations	EN 61000-6-4

Electrostatic discharge

Standards/regulations	EN 61000-4-2

Electrostatic discharge

Comments	Safety measures must be taken to prevent electrostatic discharge.

Electromagnetic HF field

Designation	Electromagnetic RF field
Standards/regulations	EN 61000-4-3
Typical deviation from the upper range value	0.5 %

Electromagnetic HF field

Comments	Criterion A

Fast transients (burst)

Designation	Fast transients (burst)
Standards/regulations	EN 61000-4-4
Typical deviation from the upper range value	2 %

Fast transients (burst)

Comments	Criterion B

Surge current load (surge)

Standards/regulations	EN 61000-4-5

Surge current load (surge)

Comments	Criterion B

Conducted interference

Designation	Conducted interferences
Standards/regulations	EN 61000-4-6
Typical deviation from the upper range value	0.5 %

Conducted interference

Comments	Criterion A

Standards and regulations

Electrical isolation	2-way isolation

Mounting

Mounting type	DIN rail mounting
Mounting position	any

Drawings

Dimensional drawing

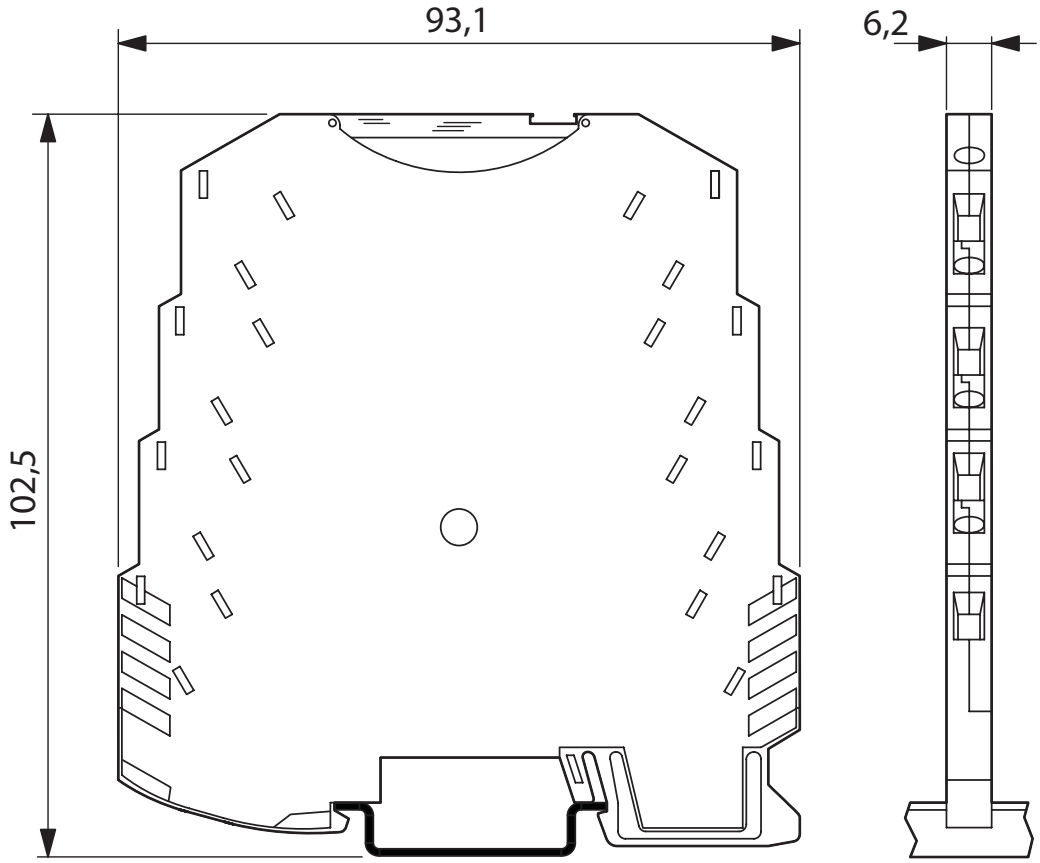

Block diagram

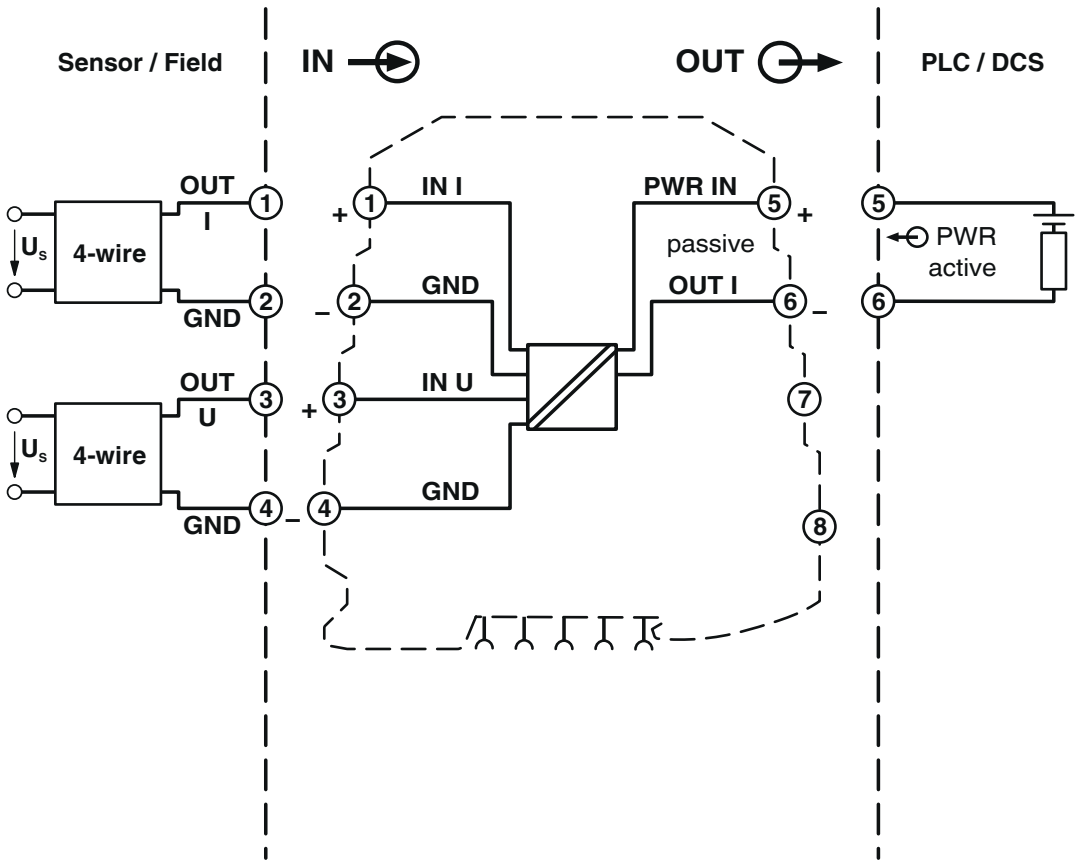

Approvals

To download certificates, visit the product detail page: https://www.phoenixcontact.com/us/products/2902829

UL Listed
Approval ID: E238705

cUL Listed
Approval ID: E238705

cUL Listed
Approval ID: E199827

UL Listed
Approval ID: FILE E 199827

cULus Listed
Approval ID: E199827

Classifications

ECLASS

ECLASS-13.0	27210120
ECLASS-15.0	27210120

ETIM

ETIM 10.0	EC002653

UNSPSC

UNSPSC 21.0	39121000

Environmental product compliance

EU RoHS

Fulfills EU RoHS substance requirements	Yes
Exemption	6(c), 7(a), 7(c)-I

China RoHS

Environment friendly use period (EFUP)	EFUP-50
	An article-related China RoHS declaration table can be found in the download area for the respective article under "Manufacturer declaration". For all articles with EFUP-E, no China RoHS declaration table issued and required.

EU REACH SVHC

REACH candidate substance (CAS No.)	Lead(CAS: 7439-92-1)
SCIP	9b7e34f5-2359-47ab-b662-8b1d0d1c1f2b

Phoenix Contact 2026 © - all rights reserved
https://www.phoenixcontact.com

Phoenix Contact USA
586 Fulling Mill Road
Middletown, PA 17057, United States
(+717) 944-1300
info@phoenixcon.com