# RAD-DO8-IFS - I/O extension module

2902811

https://www.phoenixcontact.com/us/products/2902811

Please be informed that the data shown in this PDF document is generated from our online catalog. Please find the complete data in the user documentation. Our general terms of use for downloads are valid.

CRA-READY

Radioline - I/O extension module, 8 digital transistor outputs (30.5 V DC/200 mA). Product is being prepared for compliance with the Cyber Resilience Act (CRA).

## Your advantages

- Easy startup via thumbwheel
- Channel-to-channel electrical isolation
- Extended temperature range of -40 °C … +70 °C
- Easy module replacement even during operation (hot swap)
- 8 transistor outputs (30.5 V DC/200 mA)
- Approved for use in zone 2

ELEKTROGERÄTE RÜCKNAHME

## Commercial data

| | |
|---|---|
| Item number | 2902811 |
| Packing unit | 1 pc |
| Minimum order quantity | 1 pc |
| Sales key | DN26 |
| Product key | DNC61D |

| | |
|---|---|
| GTIN | 4046356681544 |
| Weight per piece (including packing) | 178.77 g |
| Weight per piece (excluding packing) | 128.56 g |
| Customs tariff number | 85177900 |
| Country of origin | DE |

## Set consists of

### ME 17,5 TBUS 1,5/ 5-ST-3,81 KMGY - DIN rail bus connector

2713645

https://www.phoenixcontact.com/us/products/2713645

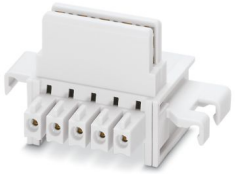

DIN rail bus connector, color: light gray, nominal current: 8 A (parallel contacts), rated voltage (III/2): 125 V, number of positions: 5, product range: TBUS5-17,5.., pitch: 3.81 mm, mounting: DIN rail mounting, locking: without, mounting method: without, type of packaging: packed in cardboard, Item with gold-plated contacts, bus connectors for connecting with electronics housings, 5 parallel contacts

# Technical data

## Notes

### Note on application

| | |
|---|---|
| Note on application | Only for industrial use |
| Note on application | As things stand now, we are preparing the product so that, as of December 11, 2027, it will comply with the requirements of the EU Cyber Resilience Act (CRA) based on the information currently available regarding the CRA. |

## Product properties

| | |
|---|---|
| Product type | Extension module |
| MTTF | 1594 Years (SN 29500 standard, temperature 25°C, operating cycle 21%) |
| | 600 Years (SN 29500 standard, temperature 40°C, operating cycle 34.25%) |
| | 230 Years (SN 29500 standard, temperature 40°C, operating cycle 100%) |

### Insulation characteristics

| | |
|---|---|
| Overvoltage category | II |
| Degree of pollution | 2 |

## Electrical properties

| | |
|---|---|
| Rated insulation voltage | 60 V (In accordance with EN/IEC 60079-7) |
| Electrical isolation | 50 V (Rated insulation voltage (in each case between channel groups 1...4 and 5...8 / TBUS supply, reinforced insulation in accordance with EN 61010)) |
| | 300 V (Rated insulation voltage (to adjacent devices, basic insulation in accordance with EN/IEC 61010)) |
| Test voltage for digital I/Os | 1.5 kV AC (50 Hz, 1 min.) |
| Maximum power dissipation for nominal condition | 0.528 W |
| Transient surge protection | yes |

### Supply

| | |
|---|---|
| Supply voltage range | 19.2 V DC ... 30.5 V DC (DIN rail bus connector) |
| Max. current consumption | ≤ 22 mA (At 24 V DC, at 25°C) |

## Output data

### Digital

| | |
|---|---|
| Output name | Transistor output, active |
| Number of outputs | 8 |
| Contact switching type | Transistor |
| Supply voltage range | 12 V DC ... 30.5 V DC (for digital outputs) |
| Maximum switching voltage | 30.5 V DC |
| Max. switching current | 0.2 A (per channel) |

| | |
|---|---|
| Output current when switched off | ≤ 300 µA |
| Output voltage when switched off | ≤ 2 V |
| Maximum switching frequency | 10 Hz |
| Behavior of the outputs (adjustable via DIP switch) | Hold / Reset |

## Connection data

| | |
|---|---|
| Tightening torque | 0.5 Nm ... 0.6 Nm |
| | 5 $lb_f$-in. ... 7 $lb_f$-in. |
| Connection method | Screw connection |
| Stripping length | 7 mm |
| Conductor cross-section, rigid min. | 0.2 mm² |
| Conductor cross-section, rigid max. | 2.5 mm² |
| Conductor cross-section flexible min. | 0.2 mm² |
| Conductor cross-section flexible max. | 2.5 mm² |
| Conductor cross-section AWG min. | 24 |
| Conductor cross-section AWG max. | 14 |
| Tightening torque | 0.5 Nm ... 0.6 Nm |
| | 5 $lb_f$-in. ... 7 $lb_f$-in. |

## Signaling

| | |
|---|---|
| Status display | LED supply voltage, PWR (green) |
| | Green LED (bus communication, DAT) |
| | LED periphery error, ERR (red) |
| | Yellow LED (digital output, DO1) |
| | Yellow LED (digital output, DO2) |
| | Yellow LED (digital output, DO3) |
| | Yellow LED (digital output, DO4) |
| | Yellow LED (digital output, DO5) |
| | Yellow LED (digital output, DO6) |
| | Yellow LED (digital output, DO7) |
| | Yellow LED (digital output, DO8) |

## Dimensions

| | |
|---|---|
| Dimensional drawing | 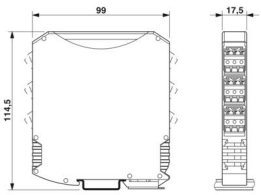  |
| Width | 17.5 mm |
| Height | 113 mm |
| Depth | 114.5 mm |

## Material specifications

| | |
|---|---|
| Color (Housing) | gray (RAL 7042) |
| Material (Housing) | PA 6.6-FR |
| Flammability rating according to UL 94 | V0 |

## Environmental and real-life conditions

### Ambient conditions

| | |
|---|---|
| Degree of protection | IP20 |
| Ambient temperature (operation) | -40 °C ... 70 °C |
| | -40 °F ... 158 °F |
| Ambient temperature (storage/transport) | -40 °C ... 85 °C |
| | -40 °F ... 185 °F |
| Altitude | 2000 m |
| Permissible humidity (operation) | 20 % ... 85 % |
| Permissible humidity (storage/transport) | 20 % ... 85 % |
| Shock | 16g, 11 ms |
| Vibration (operation) | in accordance with IEC 60068-2-6: 5g, 10 Hz ... 150 Hz |

## Approvals

### CE

| | |
|---|---|
| Certificate | CE-compliant |

### ATEX

| | |
|---|---|
| Identification | Ⓔx II 3 G Ex ec IIC T4 Gc |
| Certificate | IBExU 15 ATEX B008 X |
| Note | Please follow the special installation instructions in the documentation! |

### IECEx

| | |
|---|---|
| Identification | Ex ec IIC T4 Gc |
| Certificate | IECEx IBE 13.0019X |

### UL, USA/Canada

| | |
|---|---|
| Identification | 508 Listed |
| | Class I, Div. 2, Groups A, B, C, D T4A |
| | Class I, Zone 2, IIC T4 |

### CCC / China-Ex

| | |
|---|---|
| Identification | Ex ec IIC T4 Gc |
| Certificate | 2022122310115625 |

### Corrosive gas test

| | |
|---|---|
| Identification | ISA-S71.04-1985 G3 Harsh Group A |

## EMC data

| | |
|---|---|
| Electromagnetic compatibility | Conformance with EMC Directive 2014/30/EU |
| Noise immunity | EN 61000-6-2 |

Noise emission

| | |
|---|---|
| Standards/regulations | EN 61000-6-4 |

## Standards and regulations

EMC

| | |
|---|---|
| Standard designation | EMC – Immunity for industrial areas |
| Standards/specifications | EN 61000-6-2 |

EMC

| | |
|---|---|
| Standard designation | EMC interference emissions for industrial environments |
| Standards/specifications | EN 61000-6-4 |

Explosive atmospheres

| | |
|---|---|
| Standard designation | Ex areas, essential requirements |
| Standards/specifications | EN 60079-0 |

Explosive atmospheres

| | |
|---|---|
| Standard designation | Ex areas, type of protection n |
| Standards/specifications | EN 60079-15 |

## Mounting

| | |
|---|---|
| Mounting type | DIN rail mounting |
| Assembly note | on standard DIN rail NS 35 in accordance with EN 60715 |
| Mounting position | any |
| Useable DIN rail type | DIN rail: 35 mm |

## Drawings

Dimensional drawing

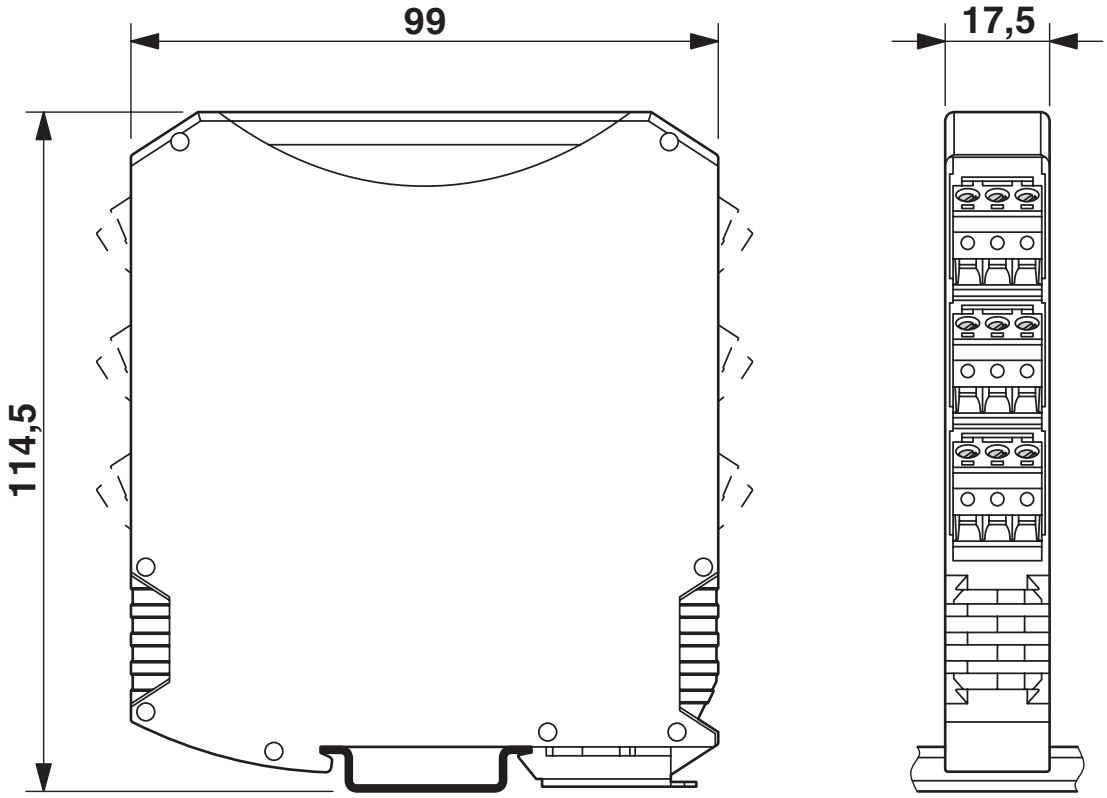


Slim design

Application drawing

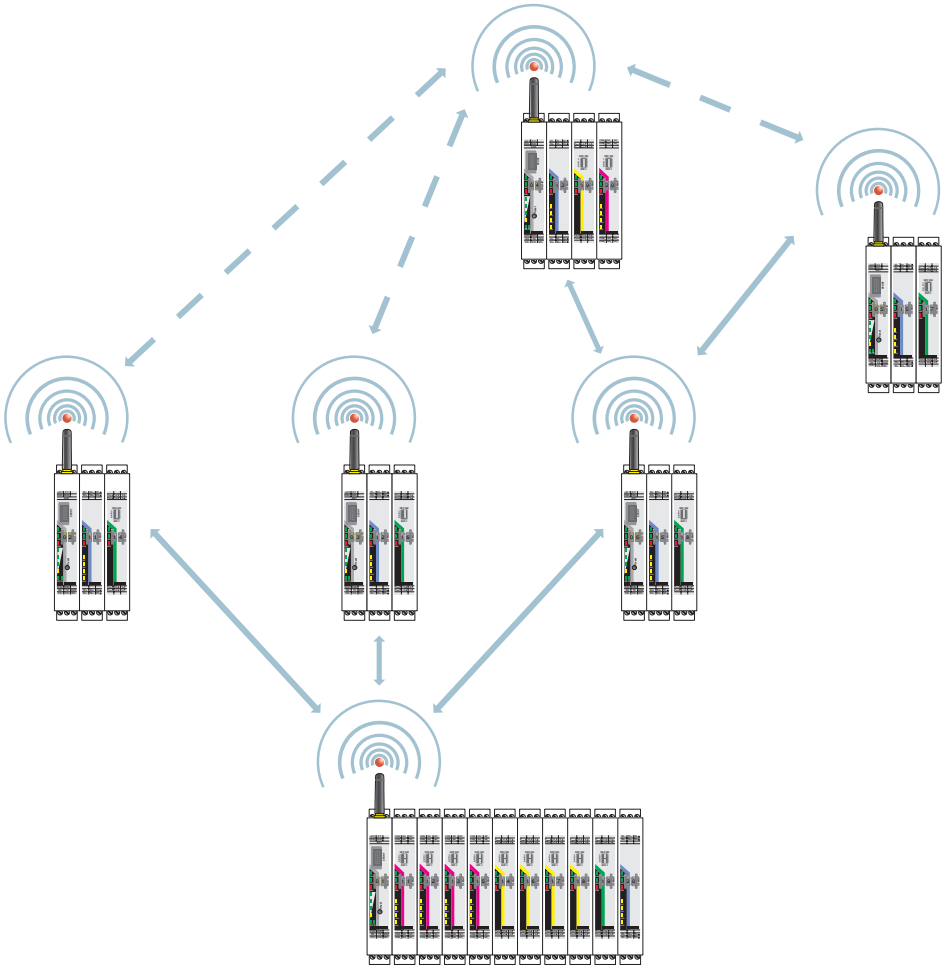

Wireless module in I/O data mode

Application drawing

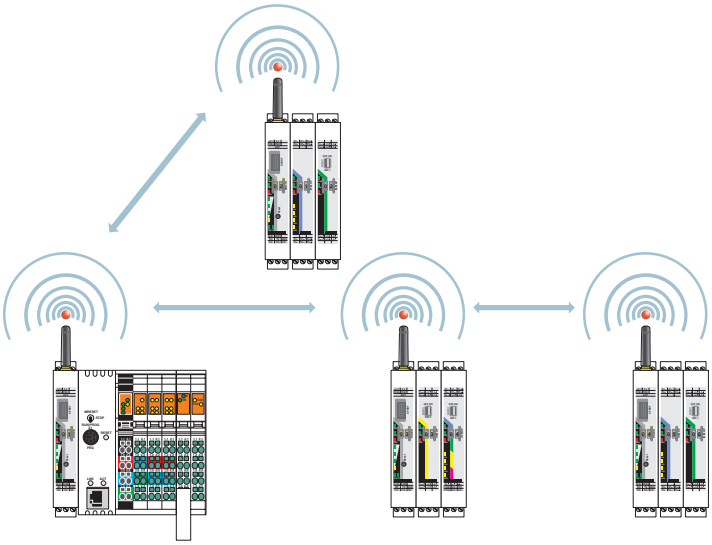

Wireless module in PLC/Modbus RTU mode

Application drawing

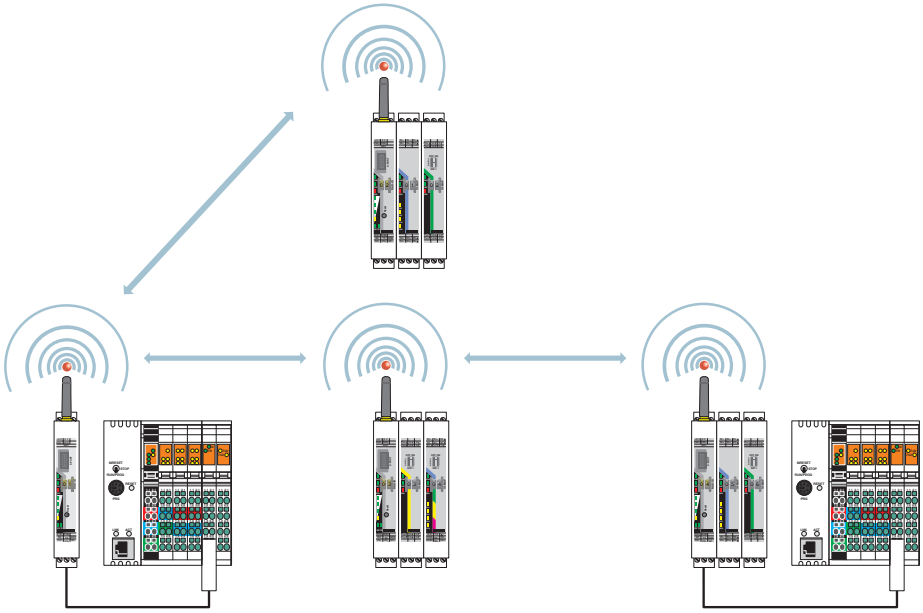

Wireless module in PLC/Modbus RTU dual mode

Schematic diagram

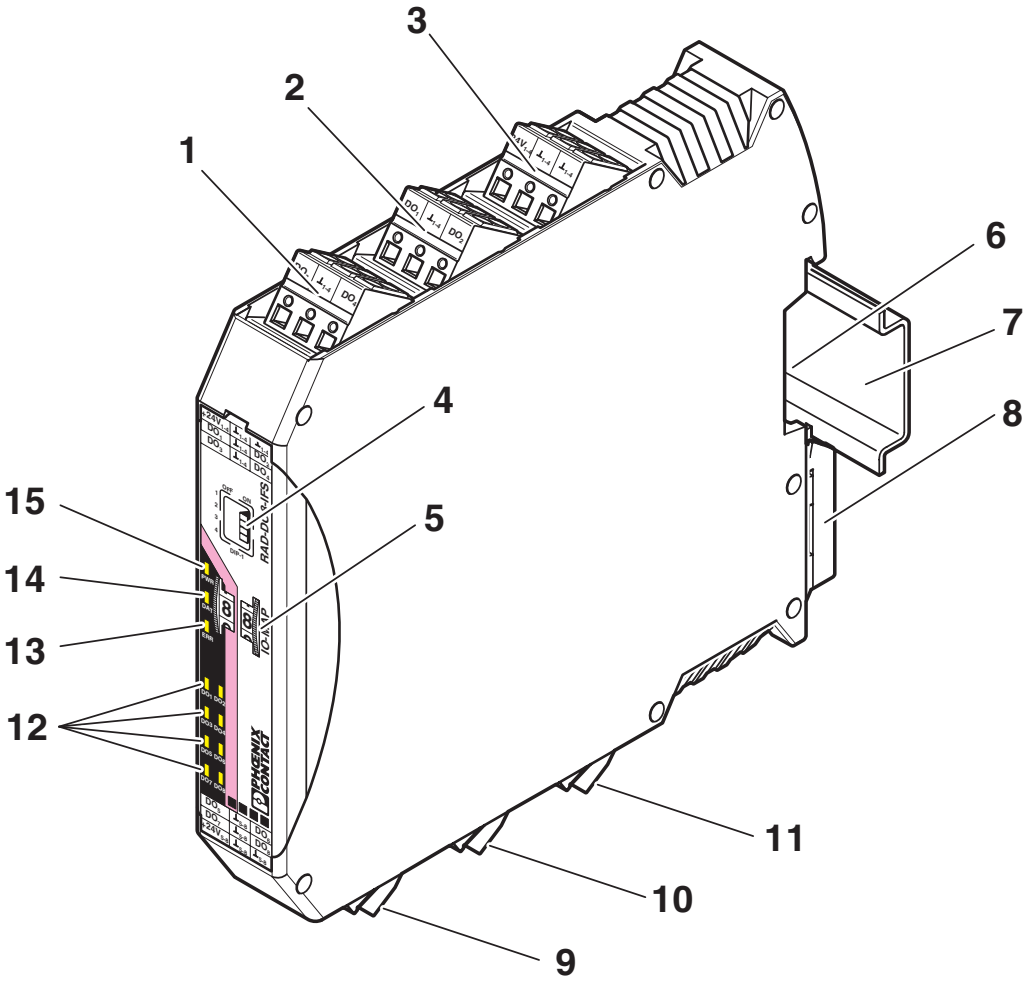


Function elements

Schematic diagram

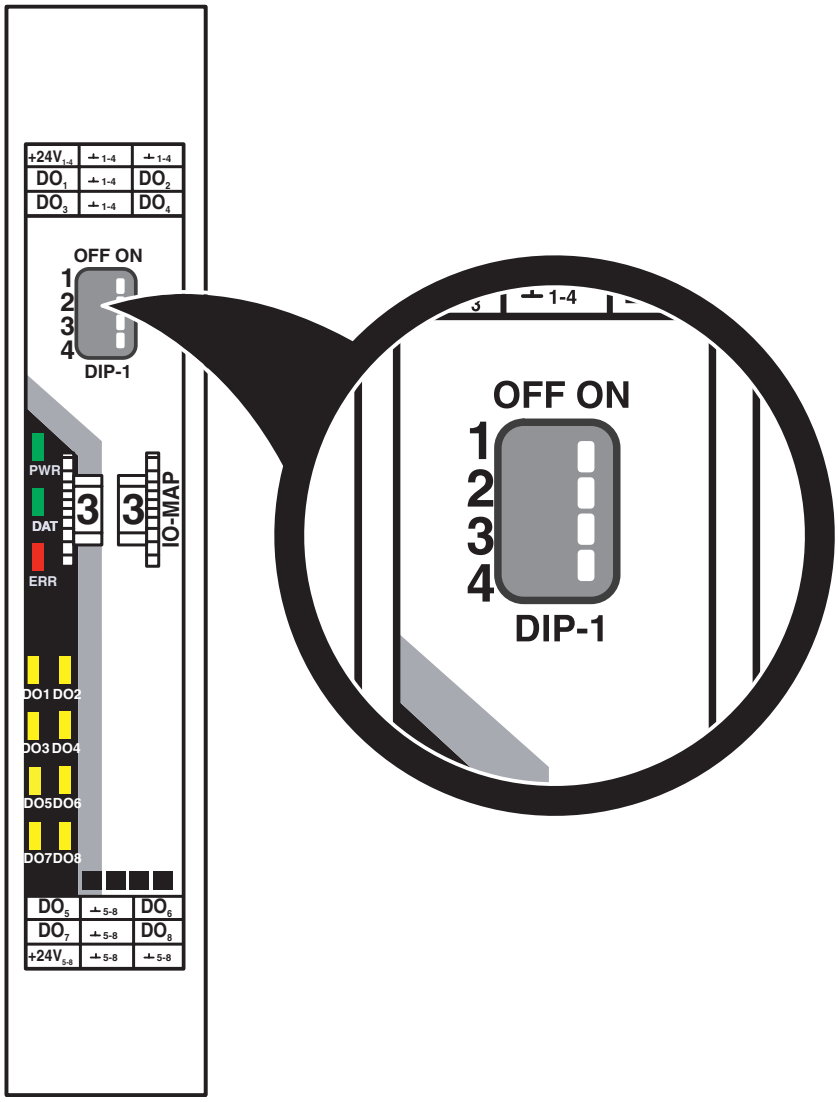


DIP switches

Schematic diagram

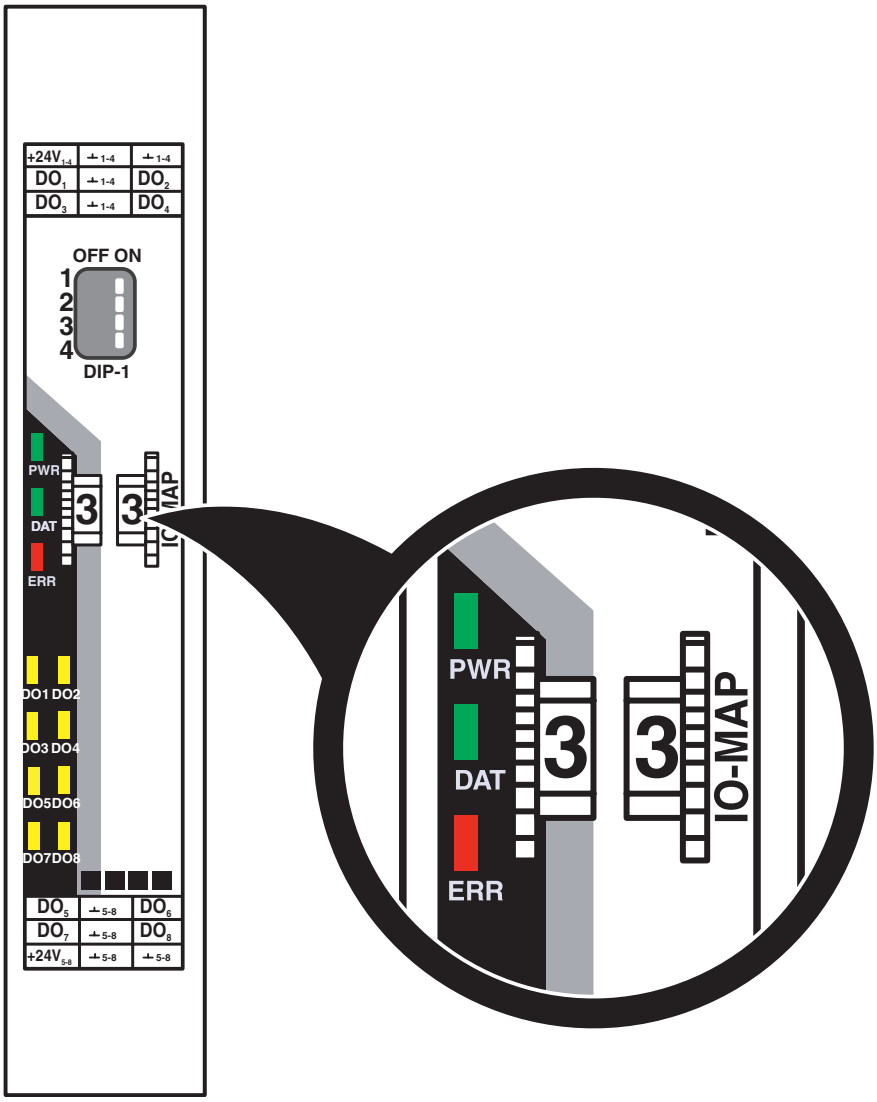


Thumbwheel

Schematic diagram

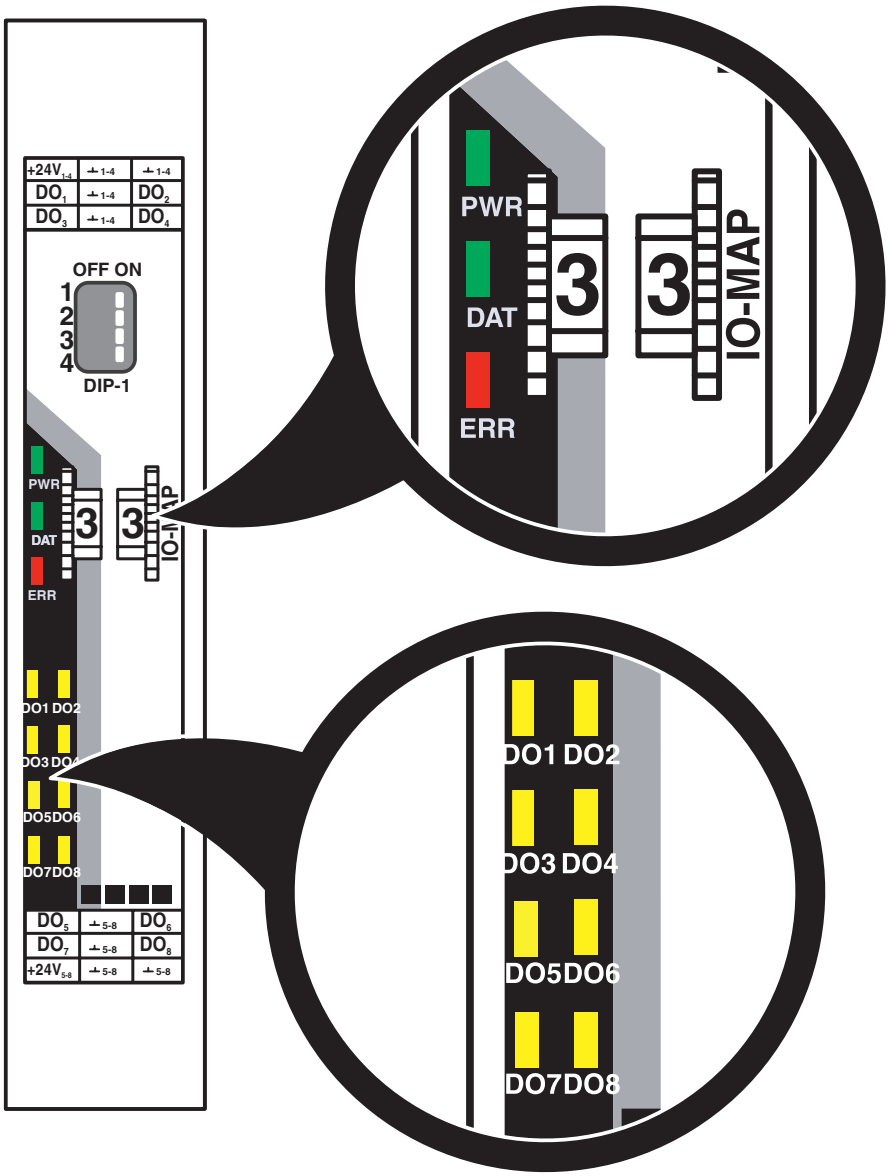


LED indicators

## Circuit diagram

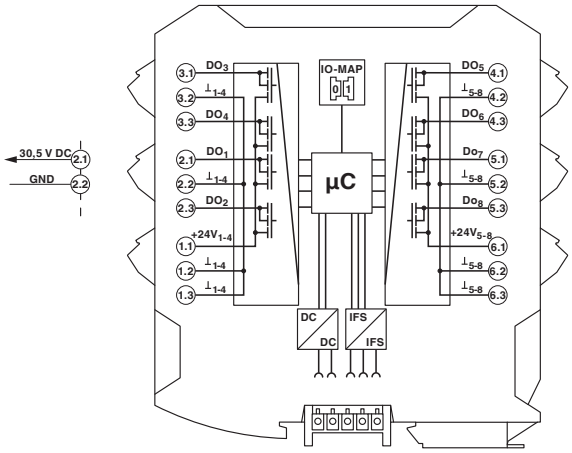


Basic circuit diagram

## Approvals

To download certificates, visit the product detail page: https://www.phoenixcontact.com/us/products/2902811

**UL Listed**
Approval ID: E238705

**cUL Listed**
Approval ID: E238705

**IECEx**
Approval ID: IECEx IBE 13.0019X

**cUL Listed**
Approval ID: E196811

**UL Listed**
Approval ID: E196811

**ATEX**
Approval ID: IBExU15ATEXB008 X

**CCC**
Approval ID: 2022122310115625

## Classifications

### ECLASS

| | |
|---|---|
| ECLASS-13.0 | 27242604 |
| ECLASS-15.0 | 27242604 |

### ETIM

| | |
|---|---|
| ETIM 10.0 | EC001599 |

### UNSPSC

| | |
|---|---|
| UNSPSC 21.0 | 32151602 |

## Environmental product compliance

EU RoHS

| | |
|---|---|
| Fulfills EU RoHS substance requirements | Yes |
| Exemption | 7(a), 7(c)-I |

China RoHS

| | |
|---|---|
| Environment friendly use period (EFUP) | EFUP-50 |
| | An article-related China RoHS declaration table can be found in the download area for the respective article under "Manufacturer declaration". For all articles with EFUP-E, no China RoHS declaration table issued and required. |

EU REACH SVHC

| | |
|---|---|
| REACH candidate substance (CAS No.) | Lead(CAS: 7439-92-1) |
| SCIP | 26a37ca1-3e71-4697-9976-5f57188c8b0a |

Phoenix Contact 2026 © - all rights reserved
https://www.phoenixcontact.com

Phoenix Contact USA
586 Fulling Mill Road
Middletown, PA 17057, United States
(+717) 944-1300
info@phoenixcon.com