RIF-T3-24UC - Timer module

2902647

https://www.phoenixcontact.com/us/products/2902647

Please be informed that the data shown in this PDF document is generated from our online catalog. Please find the complete data in the user documentation. Our general terms of use for downloads are valid.



Plug-in module for extending a relay module to create a timer relay, 3 time functions, 4 time ranges, for mounting on RIF-1, RIF-2, RIF-3, and RIF-4, input voltage: 12 V DC ... 24 V DC

Commercial data

Item number	2902647
Packing unit	5 pc
Minimum order quantity	1 pc
Sales key	C465
Product key	DK6545
GTIN	4046356668880
Weight per piece (including packing)	5.6 g
Weight per piece (excluding packing)	5.1 g
Customs tariff number	85363010
Country of origin	CN

Technical data

Notes

Utilization restriction

EMC note	EMC: class A product, see manufacturer's declaration in the download area

Product properties

Product type	Plug-in module
Product family	RIFLINE complete

Insulation characteristics: Air clearances and creepage distances in a circuit

Insulation	Basic insulation
Overvoltage category	I
Pollution degree	2

Electrical properties

Setting accuracy	3 % (of scale end value)
Repeat accuracy	1 %

Air clearances and creepage distances in a circuit

Rated insulation voltage	50 V DC
Rated surge voltage	0.4 kV

Input data

Nominal input voltage U_N	24 V DC (AC operation only permitted for RIF-1)
Input voltage range in reference to U_N	0.4 ... 1.2
Mains frequency	50 Hz
	60 Hz
Status display	LED (yellow)
Protective circuit	Varistor
Surge voltage protection	> 56 V

Output data

Limiting continuous current	≤ 250 mA (Relay coil current)
Voltage drop at max. limiting continuous current	< 100 mV

Dimensions

Width	13 mm
Height	12 mm
Depth	35 mm

Environmental and real-life conditions

Ambient conditions

Ambient temperature (operation)	-25 °C ... 50 °C (RIF-1, AC coil, 2 changeover contacts at 6 A)
	-25 °C ... 50 °C (RIF-1, DC coil, 2 changeover contacts at 5 A)
	-25 °C ... 40 °C (RIF-2, DC coil, 2 changeover contacts at 8 A)
	-25 °C ... 40 °C (RIF-2, DC coil, 4 changeover contacts at 5 A)
	-25 °C ... 40 °C (RIF-3, DC coil, 3 changeover contacts at 6.75 A)
	-25 °C ... 40 °C (RIF-3, DC coil, 2 changeover contacts at 8 A)
	-25 °C ... 35 °C (RIF-4, DC coil, 3 changeover contacts at 8 A)
	-25 °C ... 25 °C (RIF-4, DC coil, 3 N/O contacts at 8 A)
Ambient temperature (storage/transport)	-25 °C ... 85 °C

Approvals

UKCA

Certificate	UKCA-compliant

Corrosive gas test

Identification	ISA-S71.04. G3 Harsh Group
	EN 60068-2-60

Standards and regulations

Air clearances and creepage distances in a circuit

Standards/regulations	IEC 60947-5-1

Mounting

Mounting type	Plug-in mounting
Assembly note	Can be inserted into relay base
Mounting position	any

Drawings

Diagram

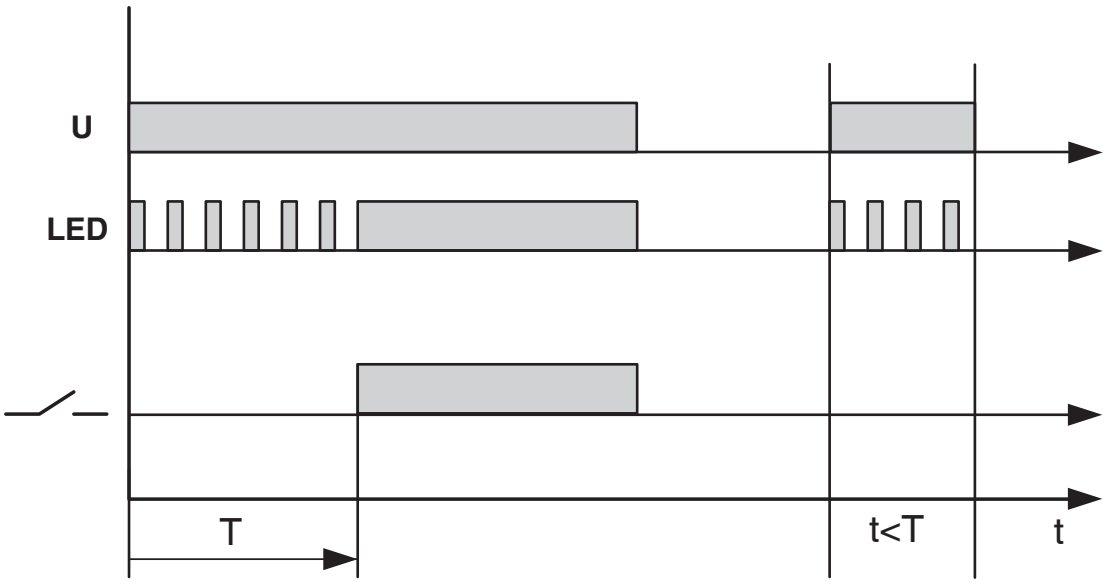

With switch-on delay

Diagram

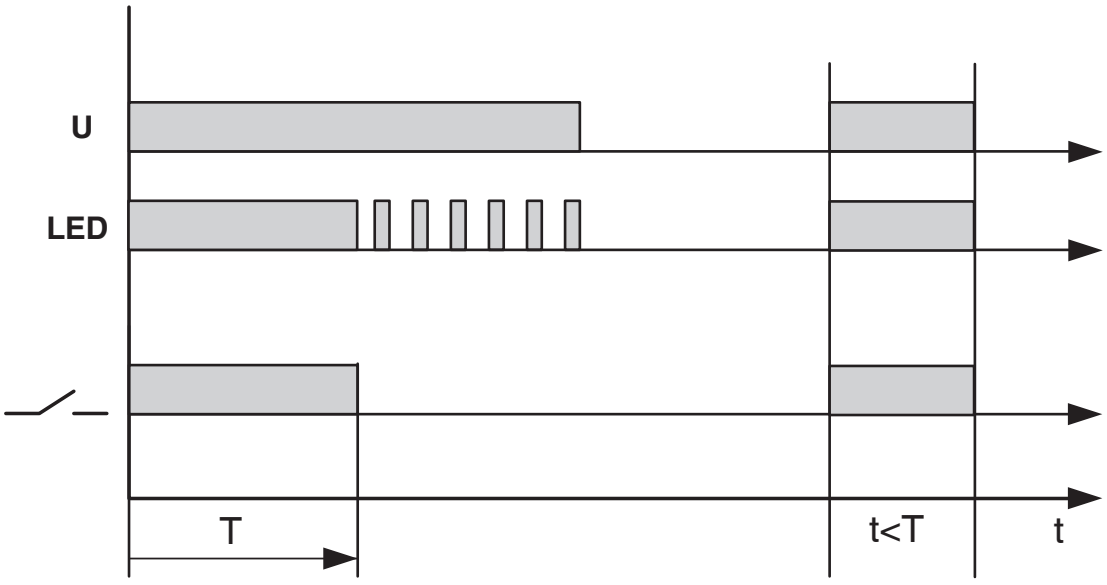

With passing make contact

Diagram

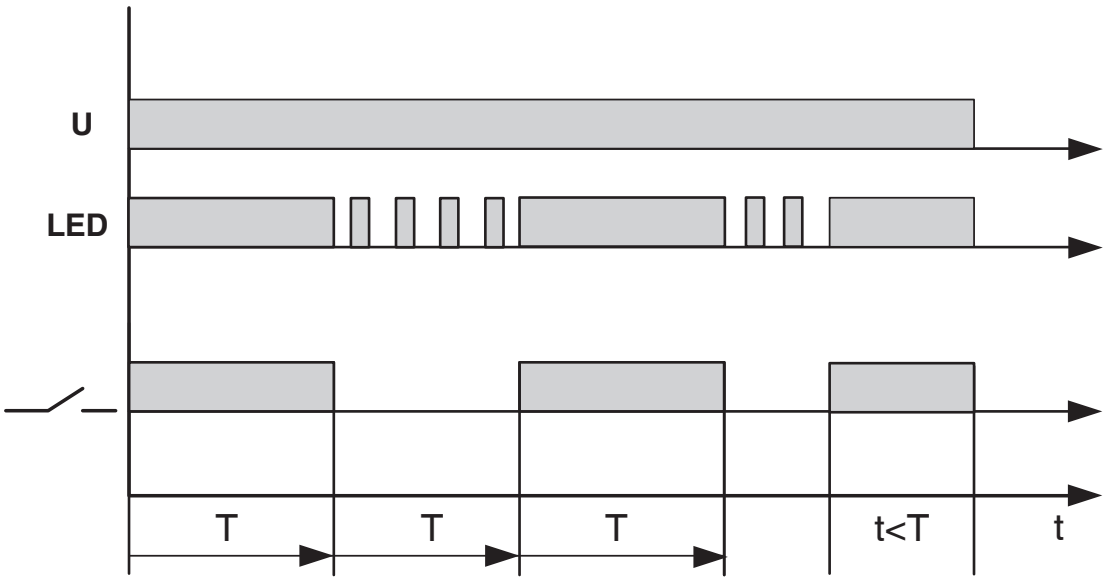

Flasher/pulse generator

Circuit diagram

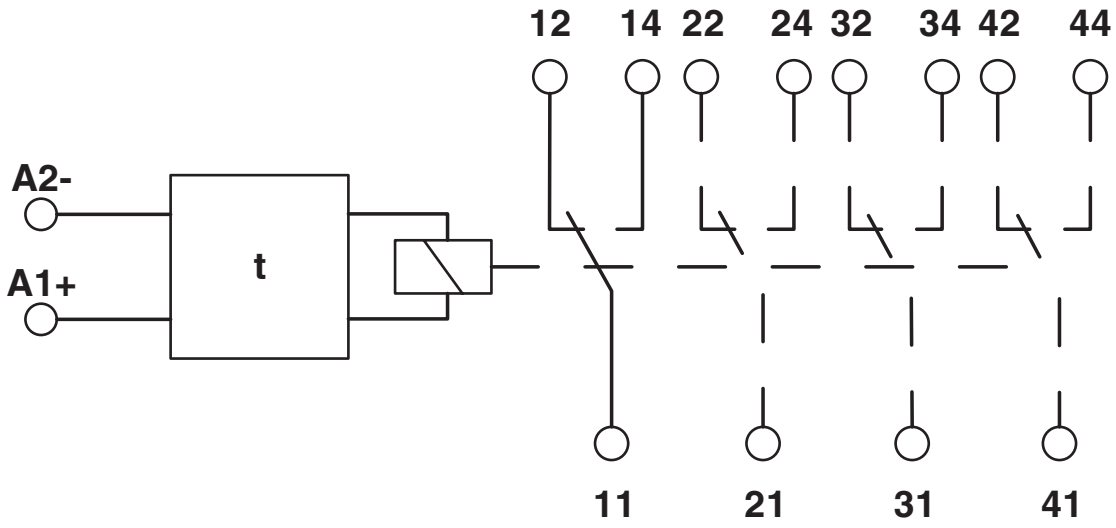

Approvals

To download certificates, visit the product detail page: https://www.phoenixcontact.com/us/products/2902647

CSA
Approval ID: 76787

UL Recognized
Approval ID: FILE E 113228

EAC
Approval ID: RU*DE.*08.B.01536/19

DNV
Approval ID: TAA000018V

Classifications

ECLASS

ECLASS-13.0	27371692
ECLASS-15.0	27371692

ETIM

ETIM 10.0	EC002586

UNSPSC

UNSPSC 21.0	39122300

Environmental product compliance

EU RoHS

Fulfills EU RoHS substance requirements	Yes
Exemption	7(c)-I

China RoHS

Environment friendly use period (EFUP)	EFUP-50
	An article-related China RoHS declaration table can be found in the download area for the respective article under "Manufacturer declaration". For all articles with EFUP-E, no China RoHS declaration table issued and required.

EU REACH SVHC

REACH candidate substance (CAS No.)	No substance above 0.1 wt%

EF3.1 Climate Change

CO2e kg	1.177 kg CO2e

Phoenix Contact 2026 © - all rights reserved
https://www.phoenixcontact.com

Phoenix Contact USA
586 Fulling Mill Road
Middletown, PA 17057, United States
(+717) 944-1300
info@phoenixcon.com