MINI MCR-2-UI-I-OLP - Input isolator

2902061

https://www.phoenixcontact.com/us/products/2902061

Please be informed that the data shown in this PDF document is generated from our online catalog. Please find the complete data in the user documentation. Our general terms of use for downloads are valid.

CRA-READY



Output loop-powered 2-way isolator with plug-in connection technology for the electrical isolation of unipolar and bipolar analog signals. Input configurable via DIP switch. Screw connection technology, standard configuration.

Product description

Output loop-powered 2-way isolator with plug-in connection technology for the electrical isolation, conversion, and filtering of analog signals. The output loop-powered isolator allows operation at an active analog input module. The device is supplied via the current loop of the controller. On the input side, standard analog signals and non-standard analog signals can be connected, ranging from 2 mA or 50 mV up to 40 mA or 30 V. These are converted to 4 mA ... 20 mA signals. You can configure the input signals via DIP switches. The measuring transducer supports NFC communication.

Commercial data

Item number	2902061
Packing unit	1 pc
Minimum order quantity	1 pc
Sales key	C404
Product key	DK1121
GTIN	4046356652100
Weight per piece (including packing)	70 g
Weight per piece (excluding packing)	107.9 g
Customs tariff number	85437090
Country of origin	DE

Technical data

Notes

Note on application

Note on application	As things stand now, we are preparing the product so that, as of December 11, 2027, it will comply with the requirements of the EU Cyber Resilience Act (CRA) based on the information currently available regarding the CRA.

Utilization restriction

EMC note	EMC: class A product, see manufacturer's declaration in the download area

Product properties

Product type	Signal conditioner
Product family	MINI Analog Pro
No. of channels	1
Configuration	DIP switches

Electrical properties

Electrical isolation	2-way isolation
Electrical isolation between input and output	yes
Limit frequency (3 dB)	approx. 30 Hz
Step response (10-90%)	20 ms
Maximum temperature coefficient	0.01 %/K
Temperature coefficient, typical	0.005 %/K
Maximum transmission error	≤ 0.1 % (of final value)

Electrical isolation

Overvoltage category	II
Pollution degree	2

Electrical isolation Input/output/power supply IEC/EN 61010-1

Standards/regulations	IEC/EN 61010-1
Rated insulation voltage	300 V_{rms}
Test voltage	3 kV AC (50 Hz, 60 s)
Insulation	Reinforced insulation

Supply

Supply voltage range	8 V DC ... 30 V DC (loop-powered, no external supply necessary)
Typical current consumption	≤ 20 mA
Power consumption	≤ 600 mW

Input data

Signal: Voltage/current

Number of inputs	1

Configurable/programmable	Yes
Voltage input signal	0 mV ... 1000 mV
	0 mV ... 750 mV
	0 mV ... 500 mV
	0 mV ... 300 mV
	0 mV ... 250 mV
	0 mV ... 200 mV
	0 mV ... 125 mV
	0 mV ... 120 mV
	0 mV ... 150 mV
	0 mV ... 100 mV
	0 mV ... 75 mV
	0 mV ... 60 mV
	0 mV ... 50 mV
	0 V ... 10 V
	0 V ... 7.5 V
	0 V ... 5 V
	0 V ... 3 V
	0 V ... 2.5 V
	0 V ... 2 V
	0 V ... 1.5 V
	0 V ... 1.25 V
	0 V ... 1.2 V
	0 V ... 30 V
	0 V ... 25 V
	0 V ... 20 V
	0 V ... 12.5 V
	0 V ... 12 V
	0 V ... 15 V
	-1000 mV ... 1000 mV
	-750 mV ... 750 mV
	-500 mV ... 500 mV
	-300 mV ... 300 mV
	-250 mV ... 250 mV
	-200 mV ... 200 mV
	-125 mV ... 125 mV
	-120 mV ... 120 mV
	-150 mV ... 150 mV
	-100 mV ... 100 mV
	-75 mV ... 75 mV
	-60 mV ... 60 mV
	-50 mV ... 50 mV
	-10 V ... 10 V
	-7.5 V ... 7.5 V

	-5 V ... 5 V
	-3 V ... 3 V
	-2.5 V ... 2.5 V
	-2 V ... 2 V
	-1.25 V ... 1.25 V
	-1.2 V ... 1.2 V
	-1.5 V ... 1.5 V
	-30 V ... 30 V
	-25 V ... 25 V
	-20 V ... 20 V
	-12.5 V ... 12.5 V
	-12 V ... 12 V
	-15 V ... 15 V
	2 V ... 10 V (additional areas can be configured, see table)
	1 V ... 5 V (additional areas can be configured, see table)
Max. voltage input signal	< 30 V
Current input signal	0 mA ... 40 mA
	0 mA ... 30 mA
	0 mA ... 20 mA
	0 mA ... 12 mA
	0 mA ... 10 mA
	0 mA ... 8 mA
	0 mA ... 7.5 mA
	0 mA ... 6 mA
	0 mA ... 5 mA
	0 mA ... 4 mA
	0 mA ... 3 mA
	0 mA ... 2.5 mA
	0 mA ... 2 mA
	4 mA ... 20 mA
	2 mA ... 10 mA
	1 mA ... 5 mA
Max. current input signal	50 mA (Dielectric strength up to 30 V)
Input resistance of voltage input	≈ kΩ (≤ 1 V)
	≈ MΩ (≥ 1 V)
Input resistance current input	25 Ω (+0.7 V for test diode)

Output data

Signal: Current

Number of outputs	1
Current output signal	4 mA ... 20 mA
Max. current output signal	32 mA
Load/output load current output	< 1000 Ω ((U_B - 8 V) / 22 mA)

Ripple	< 10 mV_{rms} (at 600 Ω)

Connection data

Connection method	Screw connection
Stripping length	10 mm
Screw thread	M3
Conductor cross-section rigid	0.2 mm² ... 1.5 mm² (with ferrule)
	0.14 mm² ... 2.5 mm² (without ferrule)
Conductor cross-section flexible	0.14 mm² ... 2.5 mm²
Conductor cross-section AWG	24 ... 12 (flexible)
Tightening torque	0.5 Nm ... 0.6 Nm

Ex data

Ex installation (EPL)	Gc
	Div. 2

Signaling

Status display	Green LED (supply voltage)

Dimensions

Width	6.2 mm
Height	109.81 mm
Depth	119.2 mm

Material specifications

Color	gray (RAL 7042)
Housing material	PBT
Fire protection for rail vehicles (DIN EN 45545-2) R22	HL 1 - HL 2
Fire protection for rail vehicles (DIN EN 45545-2) R23	HL 1 - HL 2
Fire protection for rail vehicles (DIN EN 45545-2) R24	HL 1 - HL 2

Environmental and real-life conditions

Ambient conditions

Degree of protection	IP20 (not assessed by UL)
Ambient temperature (operation)	-40 °C ... 70 °C
Ambient temperature (storage/transport)	-40 °C ... 85 °C
Altitude	≤ 2000 m
Permissible humidity (operation)	5 % ... 95 % (non-condensing)

Approvals

CE

Certificate	CE-compliant

ATEX

Identification	II 3 G Ex ec IIC T4 Gc
Certificate	BVS 19 ATEX E 079 X

IECEx

Identification	Ex ec IIC T4 Gc
Certificate	IECEx BVS 19.0068X

CCC / China-Ex

Identification	Ex ec IIC T4 Gc

UL, USA/Canada

Identification	UL 508 Listed
	Class I, Div. 2, Groups A, B, C, D T5
	Class I, Zone 2, Group IIC T5

Shipbuilding approval

Certificate	DNV GL TAA000021E Rev. 1

EAC Ex

Identification	Ex ec IIC T4 Gc
Certificate	BY/112 02.01 TP012 103.01 00081

Shipbuilding data

Temperature	B
Humidity	B
Vibration	A
EMC	A
Enclosure	Required protection according to the Rules shall be provided upon installation on board

EMC data

Electromagnetic compatibility	Conformance with EMC directive
Noise immunity	EN 61000-6-2
Note	When being exposed to interference, there may be minimal deviations.

Noise emission

Standards/regulations	EN 61000-6-4

Standards and regulations

Electrical isolation	2-way isolation

GB Standard

Standards/regulations	GB/T 3836.1
	GB/T 3836.3

Mounting

Mounting type	DIN rail mounting
Mounting position	any

Drawings

Block diagram

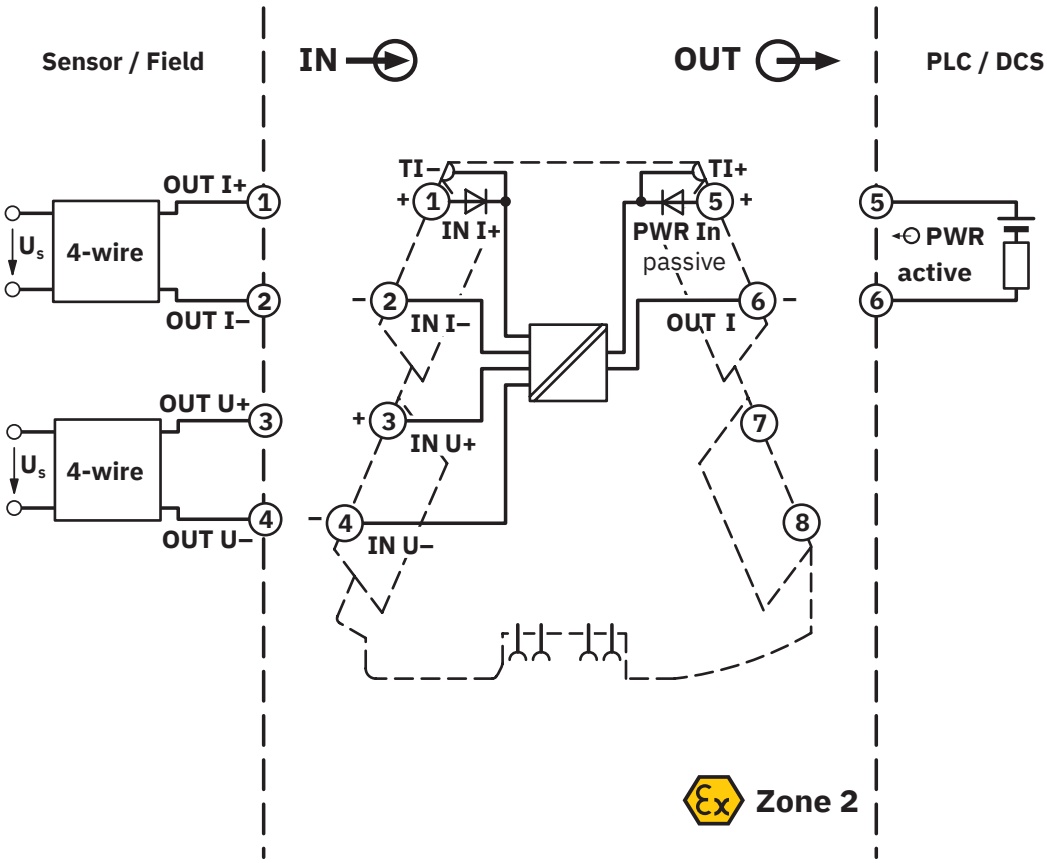

Approvals

To download certificates, visit the product detail page: https://www.phoenixcontact.com/us/products/2902061

UL Listed
Approval ID: E238705

cUL Listed
Approval ID: E238705

DNV
Approval ID: TAA000021E

IECEx
Approval ID: IECEx BVS 19.0068X

cUL Listed
Approval ID: E196811

UL Listed
Approval ID: E196811

ATEX
Approval ID: BVS 19 ATEX E 079 X

CCC
Approval ID: 2021122310114155

Classifications

ECLASS

ECLASS-13.0	27210120
ECLASS-15.0	27210120

ETIM

ETIM 10.0	EC002653

UNSPSC

UNSPSC 21.0	39121000

Environmental product compliance

EU RoHS

Fulfills EU RoHS substance requirements	Yes
Exemption	7(a), 7(c)-I

China RoHS

Environment friendly use period (EFUP)	EFUP-50
	An article-related China RoHS declaration table can be found in the download area for the respective article under "Manufacturer declaration". For all articles with EFUP-E, no China RoHS declaration table issued and required.

EU REACH SVHC

REACH candidate substance (CAS No.)	Lead(CAS: 7439-92-1)
SCIP	9d0e5914-dc98-46b4-b0bd-8bef6b05e975

Phoenix Contact 2026 © - all rights reserved
https://www.phoenixcontact.com

Phoenix Contact USA
586 Fulling Mill Road
Middletown, PA 17057, United States
(+717) 944-1300
info@phoenixcon.com